POWER SUPPLY

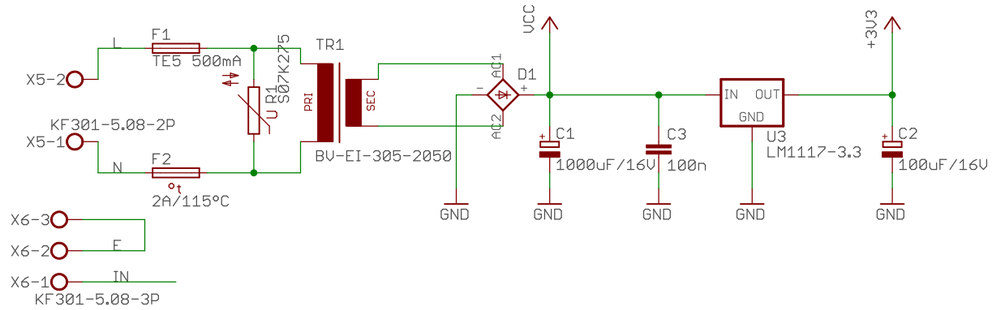

RF RECEIVER

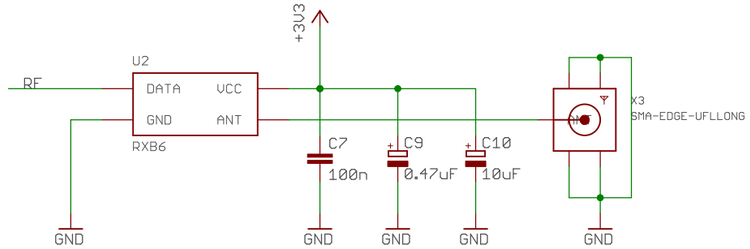

ESP8266

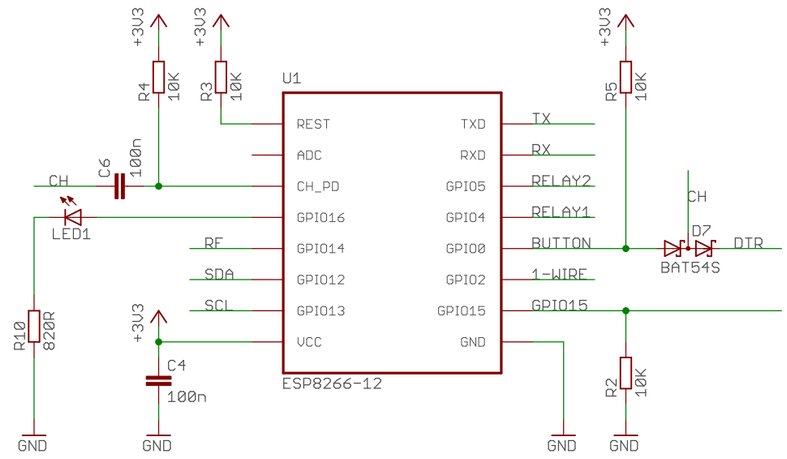

CONNECTORS

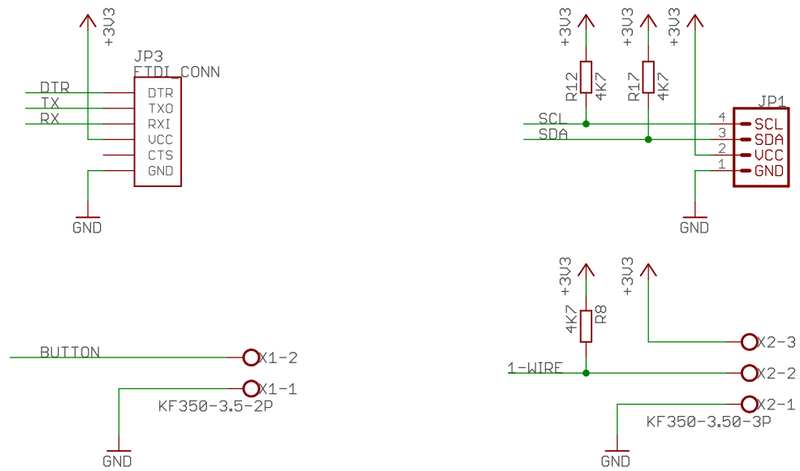

RELAYS

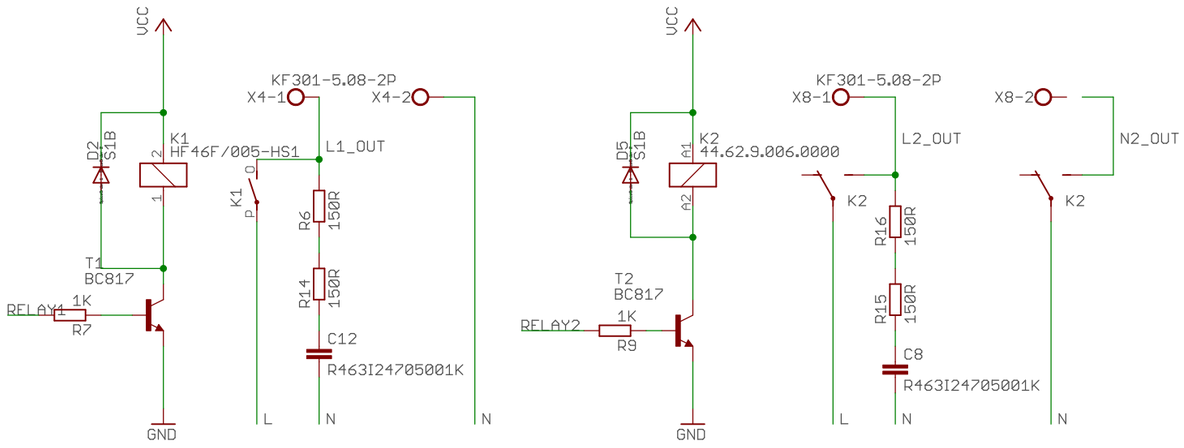

IN

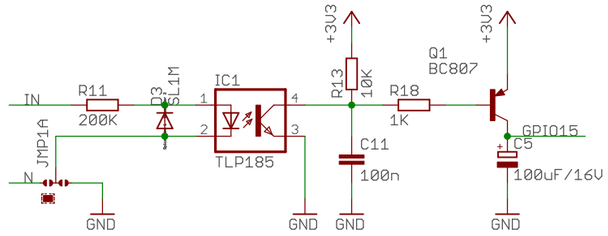

H1
MOUNT-PAD-ROUND3.0

H2
MOUNT-PAD-ROUND3.0

H3
MOUNT-PAD-ROUND3.0

open hardware

ESP_DIN_V1.1