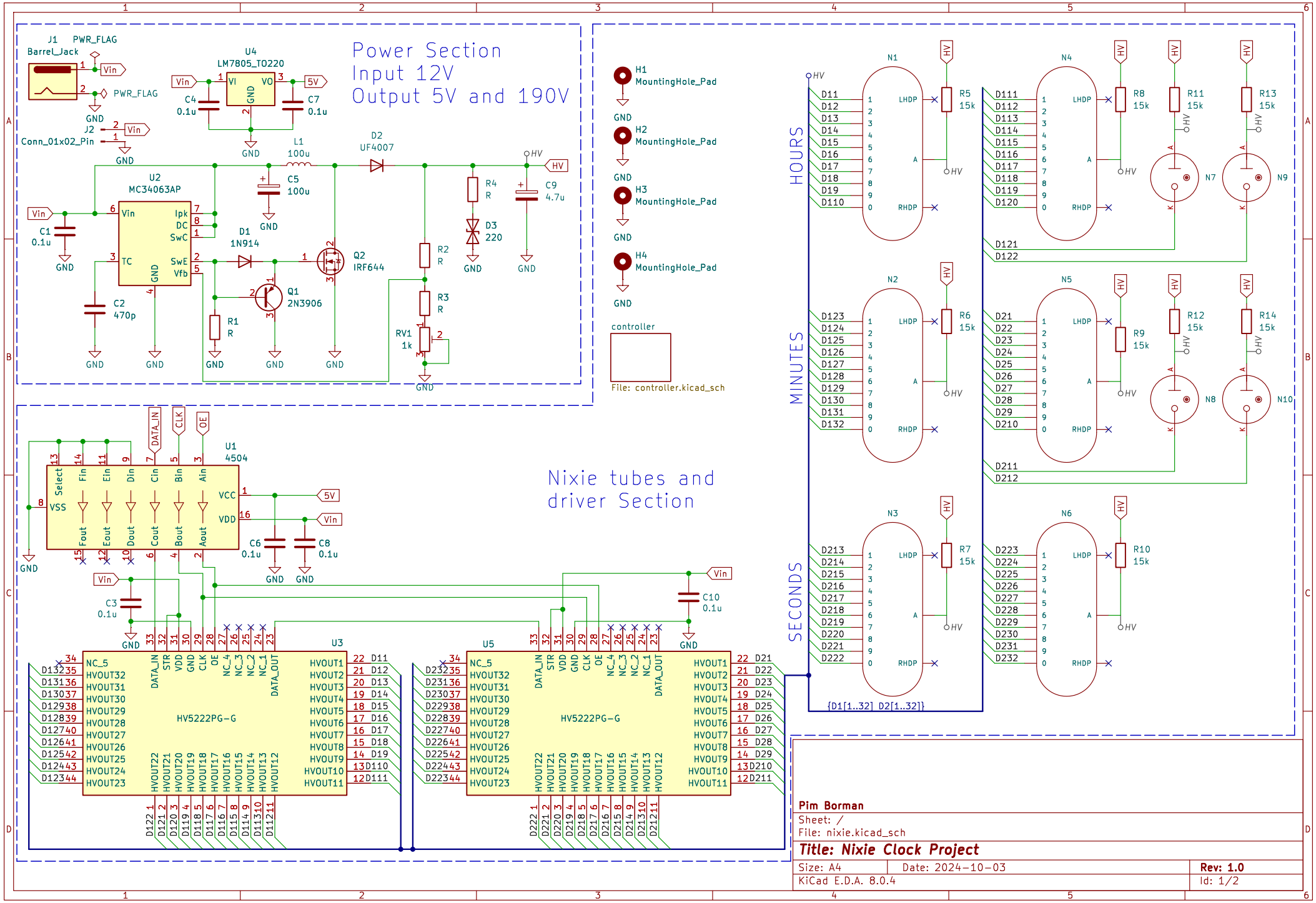
Power Section
Input 12V
Output 5V and 190V
J1 PWR_FLAG
Barrel_Jack
PWR_FLAG
J2
Conn_01x02_Pin
U4
LM7805_TO220
C4 0.1u
C7 0.1u
L1 100u
D2 UF4007
C5 100u
C9 4.7u
U2
MC34063AP
C1 0.1u
C2 470p
D1 1N914
Q1 2N3906
Q2 IRF644
R1 R
R2 R
R3 R
R4 R
D3 220
RV1 1k
H1 MountingHole_Pad
H2 MountingHole_Pad
H3 MountingHole_Pad
H4 MountingHole_Pad
controller
File: controller.kicad_sch
Nixie tubes and
driver Section
U1
4504
C3 0.1u
C6 0.1u
C8 0.1u
C10 0.1u
U3
U5
HV5222PG-G
HOURS
MINUTES
SECONDS
N1
N2
N3
N4
N5
N6
N7
N8
N9
N10
R5 15k
R6 15k
R7 15k
R8 15k
R9 15k
R10 15k
R11 15k
R12 15k
R13 15k
R14 15k
{D1[1..32] D2[1..32]}
Pim Borman
Sheet: /
File: nixie.kicad_sch
Title: Nixie Clock Project
Size: A4
Date: 2024-10-03
Rev: 1.0
KiCad E.D.A. 8.0.4
Id: 1/2

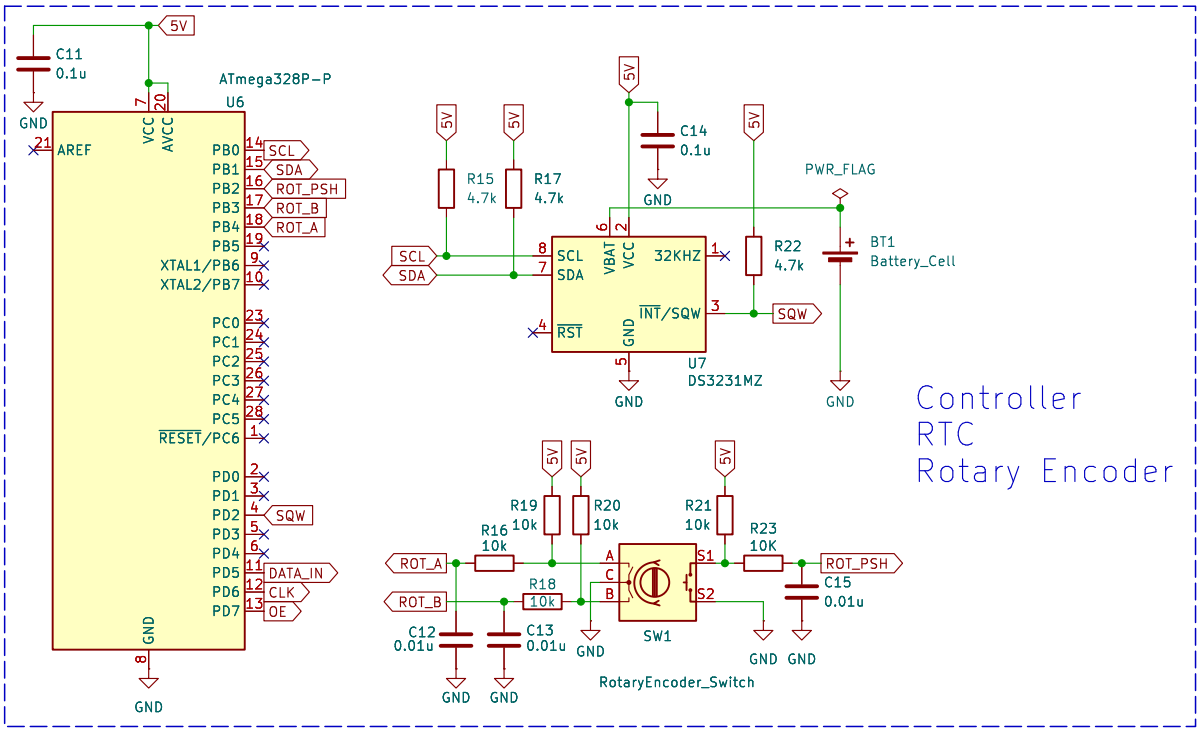

Pim Borman

Sheet: /controller/
File: controller.kicad_sch

Title: Nixie Clock Project

Size: A4	Date: 2024-10-03	**Rev: 1.0**
KiCad E.D.A. 8.0.4		Id: 2/2