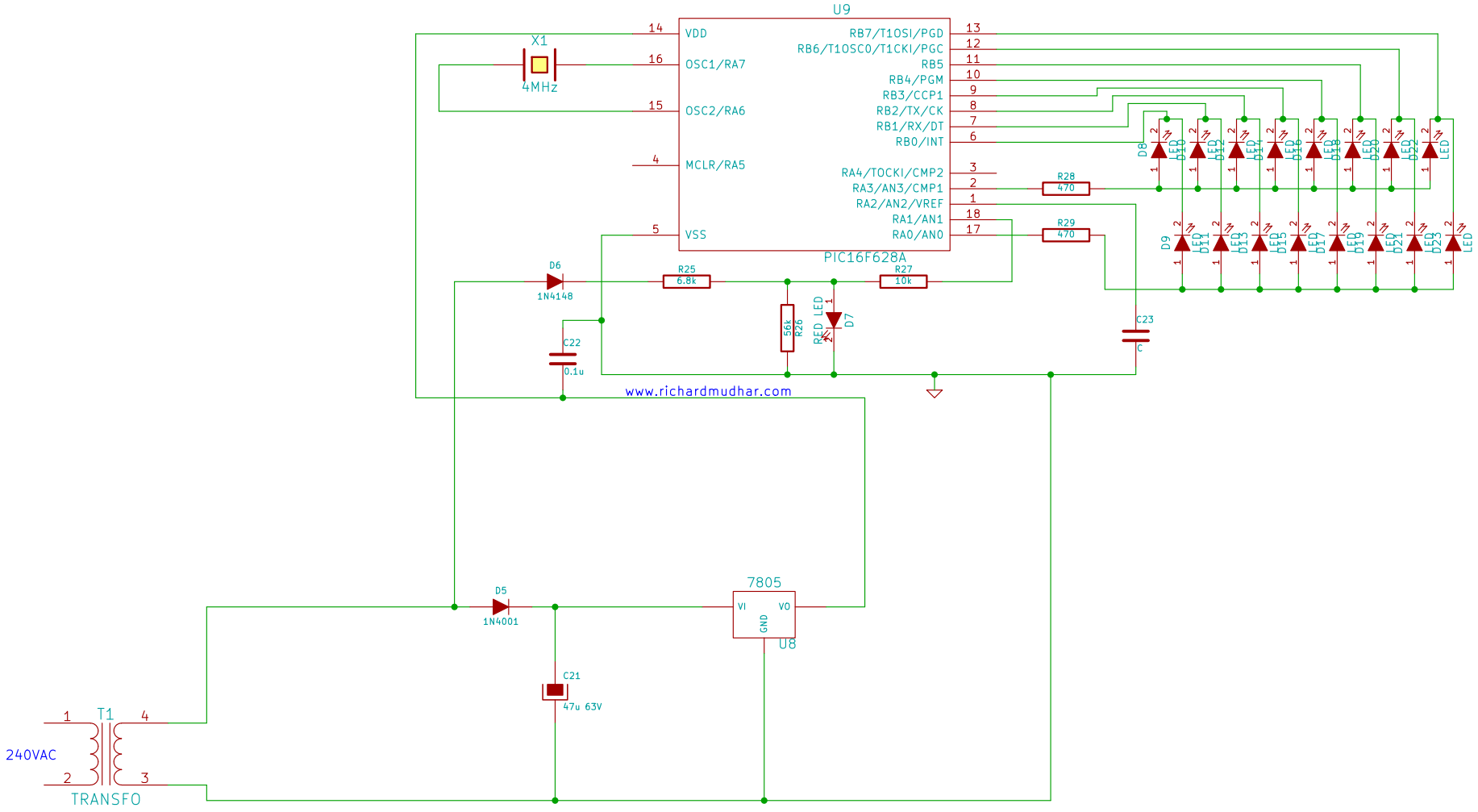


| | | |
|---|---|---|
| RM | | |
| File: mainsfreq.sch | | |
| Sheet: /Mins Frequency Display/ | | |
| Title: Mains Frequency Display | | |
| Size: A4 | Date: 17 apr 2017 | Rev: 2 |
| KiCad E.D.A. | | Id: 13/13 |