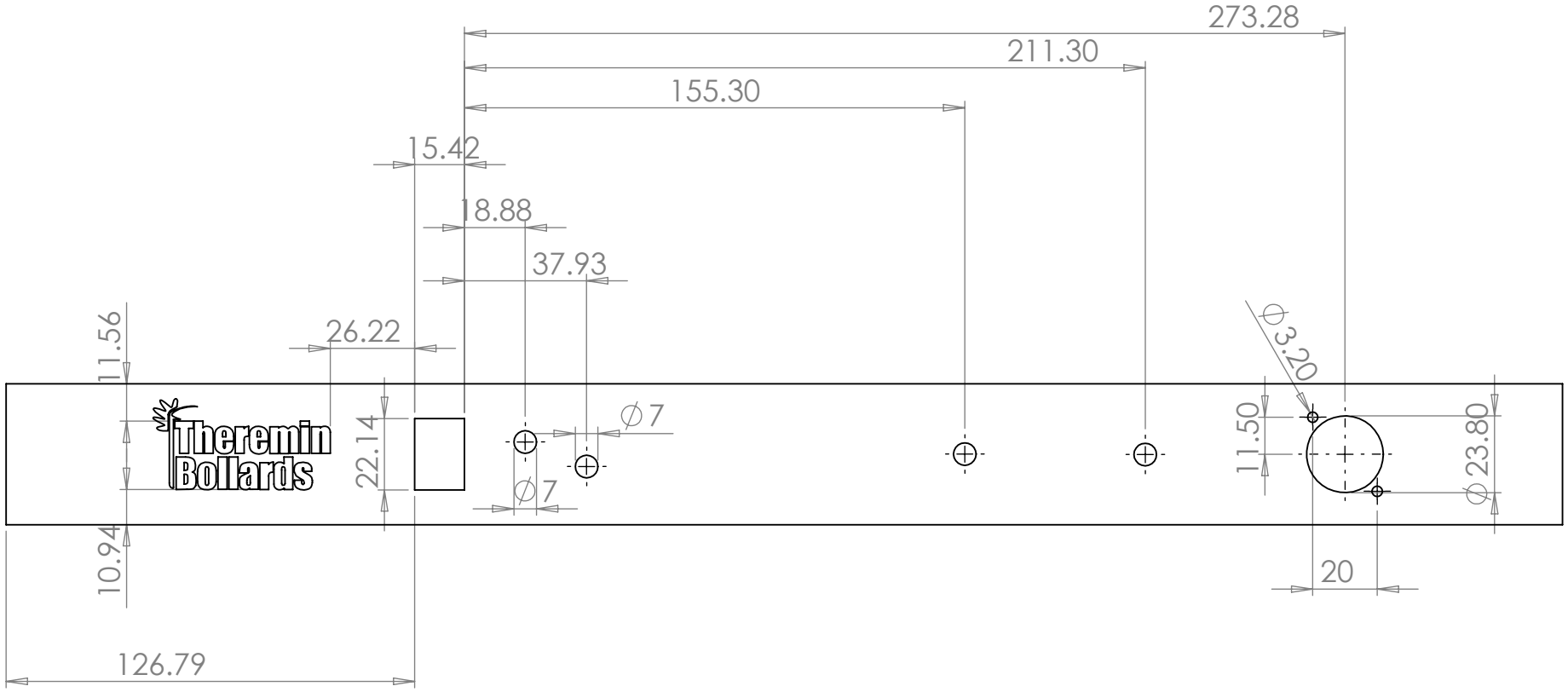

UNLESS OTHERWISE SPECIFIED: DIMENSIONS ARE IN MILLIMETERS SURFACE FINISH: TOLERANCES: LINEAR: ANGULAR:	FINISH: Anodized				DEBURR AND BREAK SHARP EDGES	DO NOT SCALE DRAWING / REVISION
	NAME	SIGNATURE	DATE			TITLE: 1URack_FrontPanel
DRAWN						
CHK'D						
APPV'D						
MFG						
Q.A				MATERIAL: Aluminium		DWG NO. / A4
				WEIGHT:		SCALE:1:5 / SHEET 1 OF 1