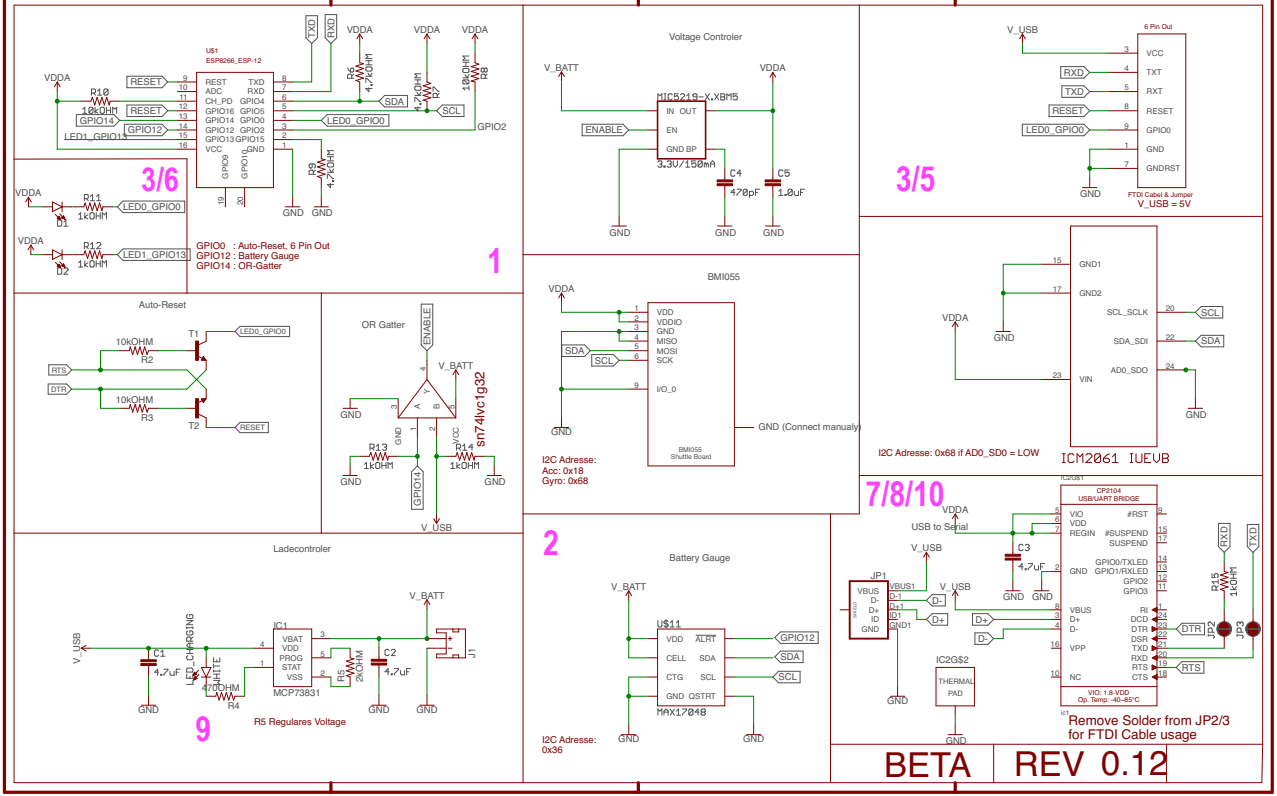
1
U$1
ESP8266_ESP-12
REST
ADC
CH_PD
GPIO16
GPIO14
GPIO12
GPIO13
VCC
TXD
RXD
GPIO5
GPIO4
GPIO0
GPIO2
GPIO15
GND
GPIO9
GND
VDDA
R10
10kOHM
RESET
GPIO14
GPIO12
LED1_GPIO13
R5
4,7kOHM
R7
4,7kOHM
R8
10kOHM
SDA
SCL
LED0_GPIO0
R9
4,7kOHM
GND
3/6
VDDA
R11
1kOHM
D1
LED0_GPIO0
R12
1kOHM
D2
LED1_GPIO13
GPIO0 : Auto-Reset, 6 Pin Out
GPIO12 : Battery Gauge
GPIO14 : OR-Gatter
Voltage Controler
V_BATT
VDDA
ENABLE
MIC5219-X.XBM5
IN
OUT
EN
GND
BP
3.3V/150mA
C4
470pF
C5
1,0uF
GND
3/5
V_USB
6 Pin Out
VCC
TXT
RXT
RESET
GPIO0
GND
GNDRST
RXD
TXD
RESET
LED0_GPIO0
GND
FTDI Cabel & Jumper
V_USB = 5V
Auto-Reset
T1
T2
10kOHM
R2
10kOHM
R3
RTS
DTR
LED0_GPIO0
RESET
OR Gatter
ENABLE
V_BATT
sn74lvc1g32
GND
R13
1kOHM
R14
1kOHM
GPIO14
V_USB
BMI055
VDDA
VDD
VDDIO
GND
MISO
MOSI
SCK
I/O_0
SDA
SCL
GND
BMI055
Shuttle Board
GND (Connect manualy)
I2C Adresse:
Acc: 0x18
Gyro: 0x68
2
VDDA
GND
GND1
GND2
SCL_SCLK
SDA_SDI
AD0_SDO
VIN
SCL
SDA
GND
I2C Adresse: 0x68 if AD0_SD0 = LOW
ICM2061 IUEVB
7/8/10
IC2GS1
CP2104
USB/UART BRIDGE
VIO
VDD
REGIN
#RST
#SUSPEND
SUSPEND
GPIO0/TXLED
GND
GPIO1/RXLED
GPIO2
GPIO3
VBUS
D+
D-
VPP
NC
RI
DCD
DTR
DSR
TXD
RXD
RTS
CTS
VIO: 1.8-VDD
Op. Temp: -40~85°C
IC1
VDDA
USB to Serial
V_USB
C3
4,7uF
GND
JP1
VBUS
D-
D+
ID
GND
D-
D+
IC2GS2
THERMAL
PAD
RXD
TXD
R15
1kOHM
JP2
JP3
DTR
RTS
Remove Solder from JP2/3
for FTDI Cable usage
Ladecontroler
V_USB
C1
4,7uF
LED_CHARGING
LED_WHITE
470OHM
R4
IC1
VBAT
VDD
PROG
STAT
VSS
MCP73831
R5
2kOHM
C2
4,7uF
V_BATT
J1
GND
R5 Regulares Voltage
9
Battery Gauge
V_BATT
U$11
VDD
ALRT
CELL
SDA
CTG
SCL
GND
QSTRT
MAX17048
GPIO12
SDA
SCL
I2C Adresse:
0x36
BETA
REV 0.12