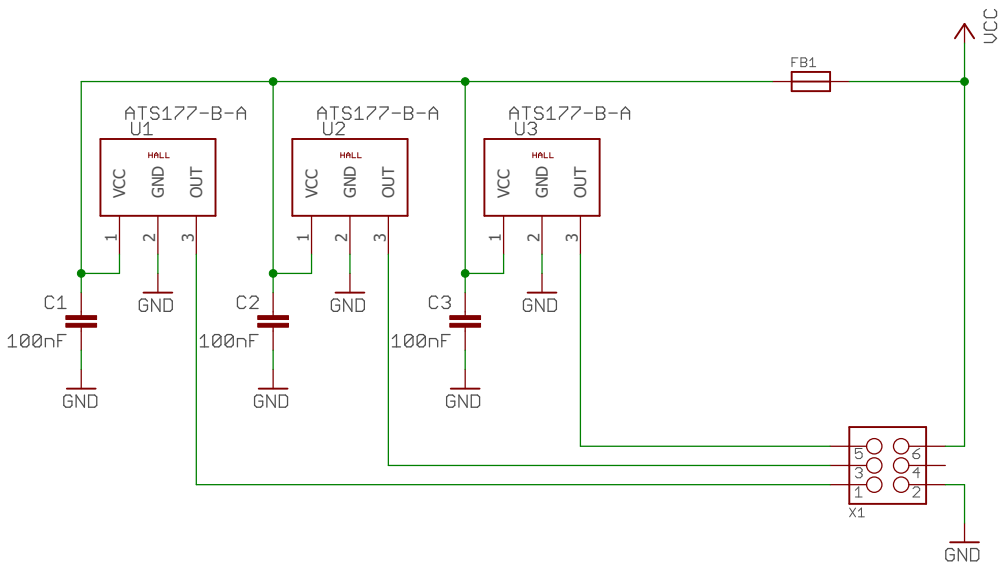

Hall Effect Sensor 80mm

10/09/2016 19:03

Sheet: 1/1