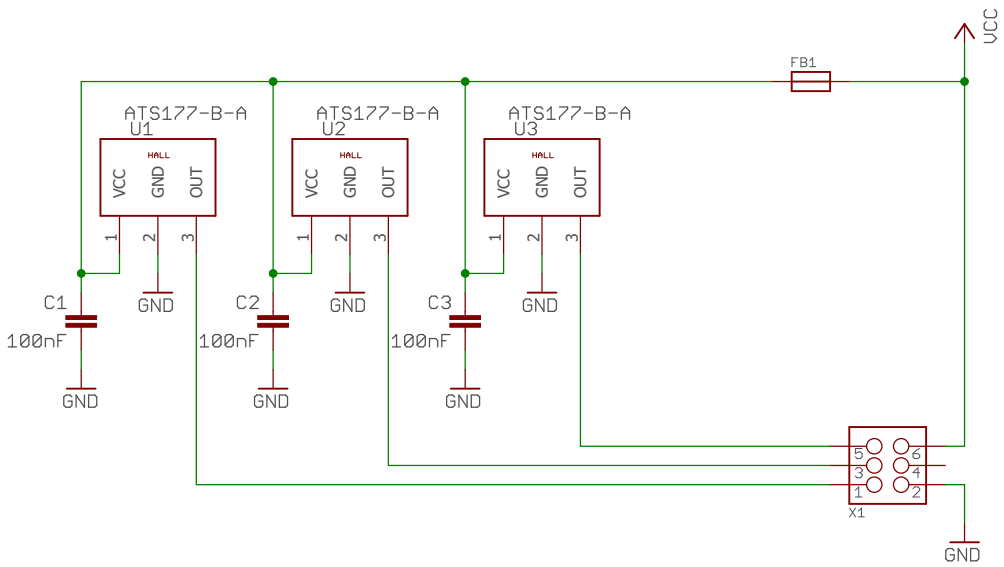

Hall Effect Sensor 63mm

12/03/2016 12:26

Sheet: 1/1