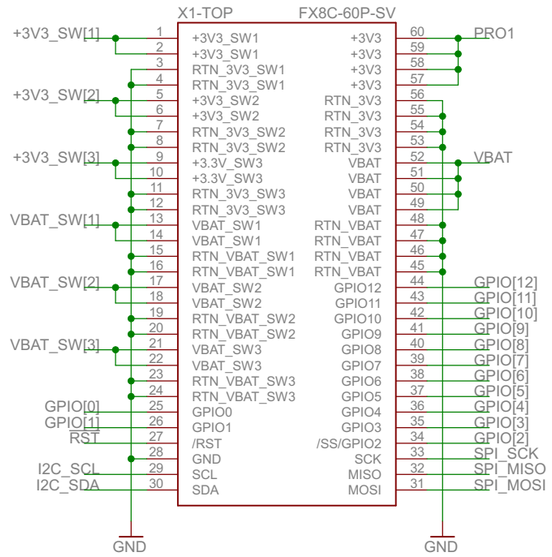

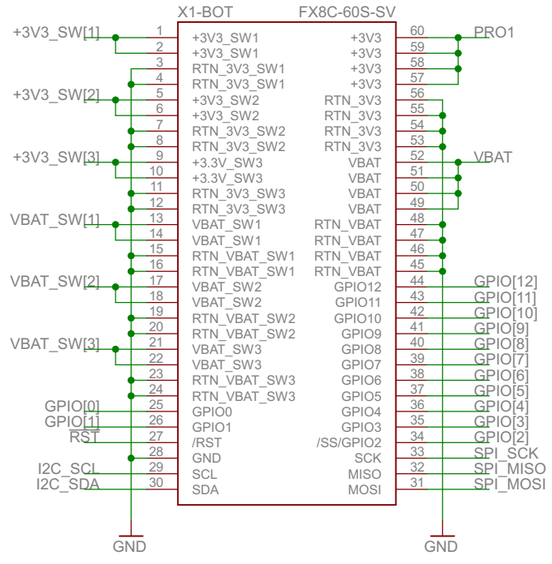

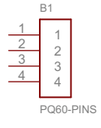

PQ60-Template

07/07/2015 19:35:23

Sheet: 1/1