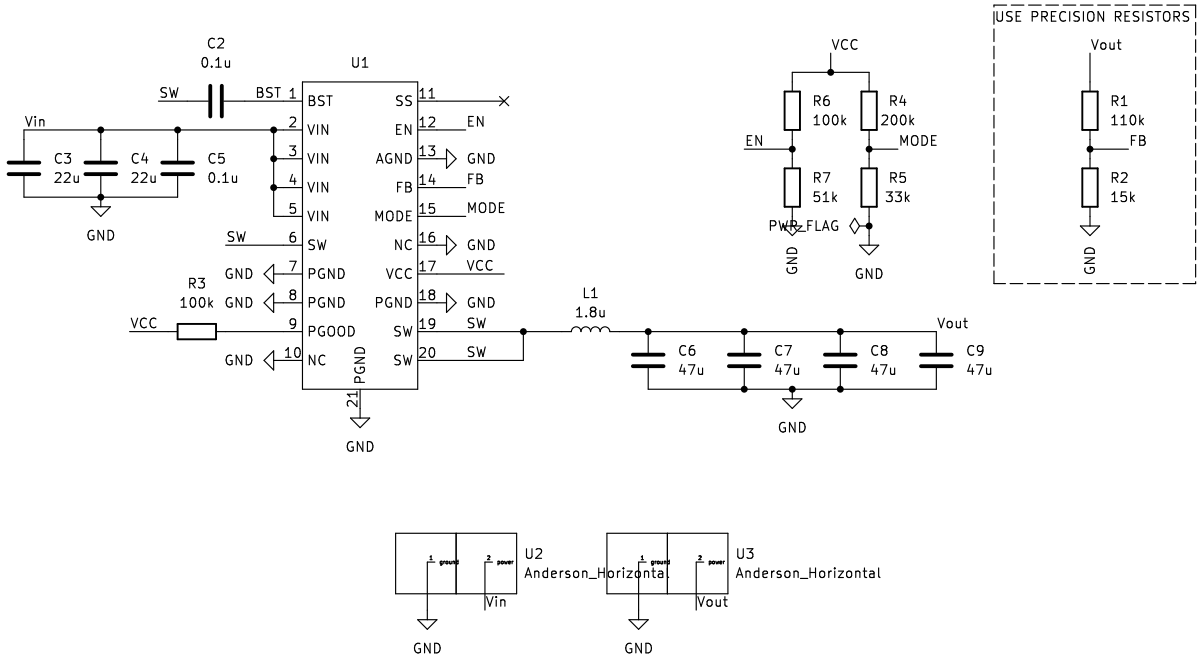

Sheet: /
File: DC-DC_converter_v2.kicad_sch

Title:

Size: A4	Date:	**Rev:**
KiCad E.D.A. eeschema 7.0.7		Id: 1/1