POWER: INPUT SUPPLY

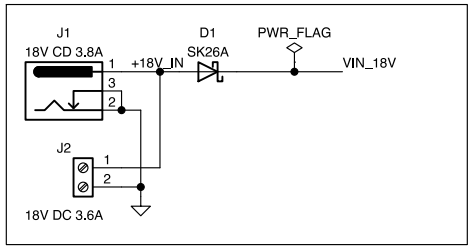

CD-DC CONVERTOR

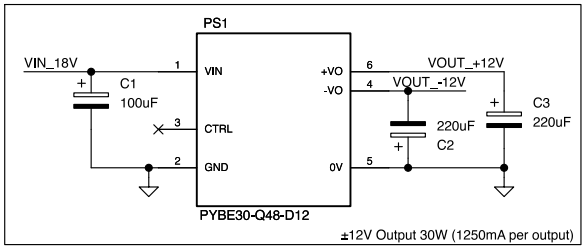

POWER OUTPUTS & MOUNT HOLES

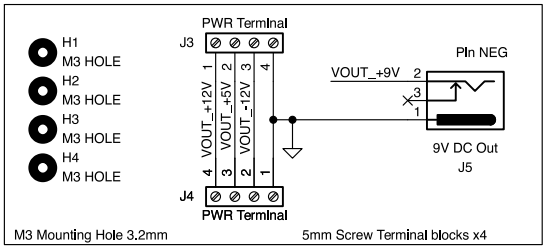

9V VOLTAGE REGULATOR

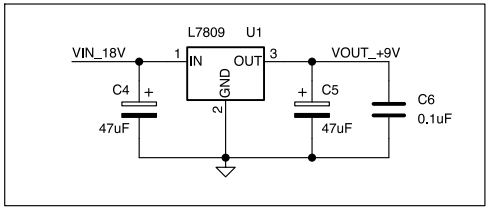

LED PWR INDICATORS

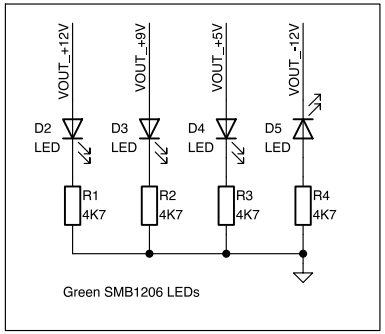

5V VOLTAGE REGULATOR

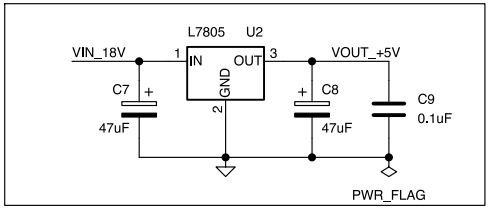

https://github.com/pipthepilot/Eurorack/tree/main/PWR

Sheet: /
File: SYNTH_PWR_MKII.kicad_sch

Title: SYNTH Power Board MKii

Size: A4	Date: 2023-10-14	**Rev: 1.0**
KiCad E.D.A. kicad 7.0.8		Id: 1/1