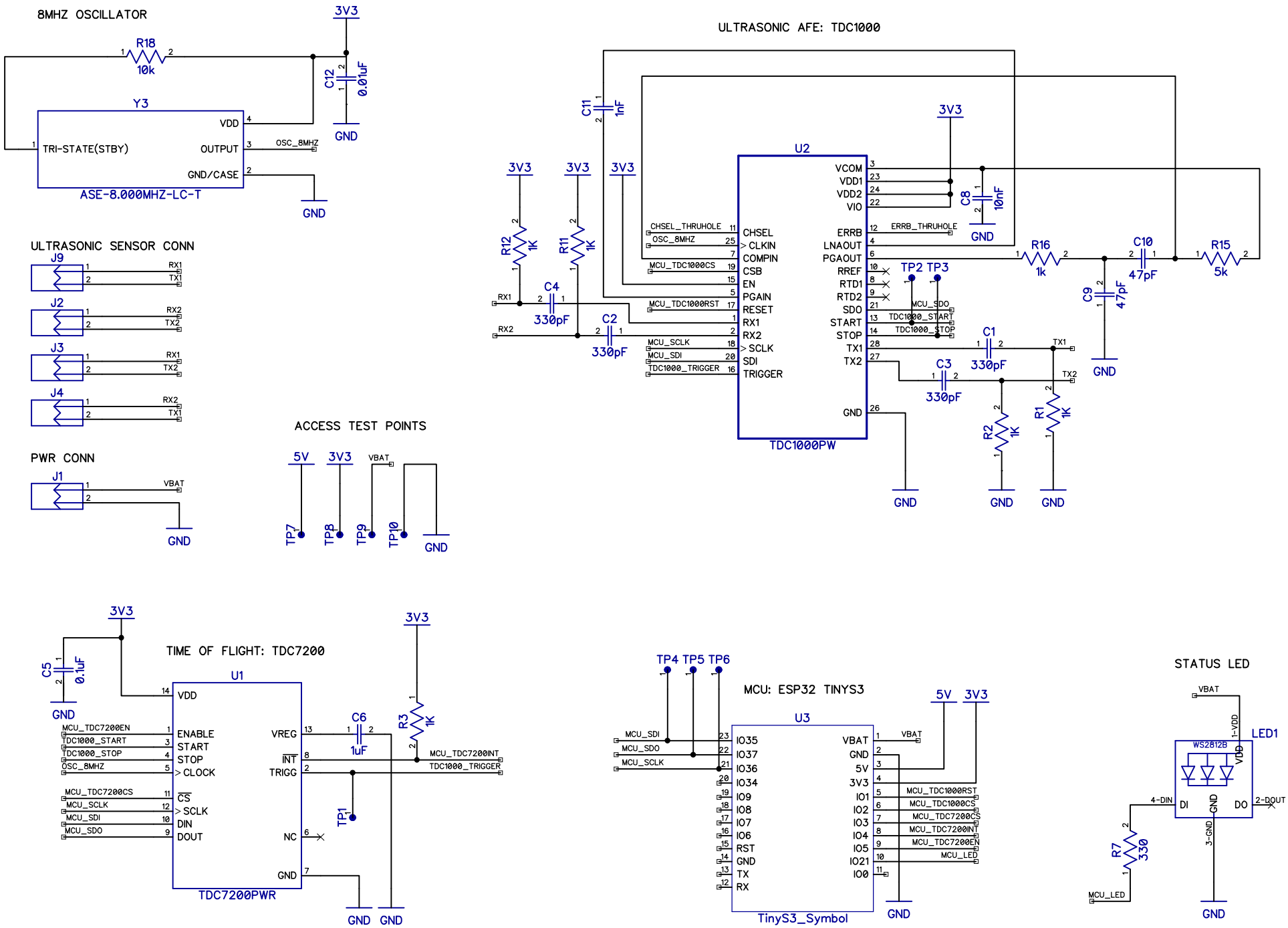
8MHZ OSCILLATOR
R18
10k
3V3
C12
0.01uF
GND
Y3
VDD
TRI-STATE(STBY)
OUTPUT
OSC_8MHZ
GND/CASE
ASE-8.000MHZ-LC-T
GND
ULTRASONIC SENSOR CONN
J9
RX1
TX1
J2
RX2
TX2
J3
RX1
TX2
J4
RX2
TX1
PWR CONN
J1
VBAT
GND
ACCESS TEST POINTS
5V
3V3
VBAT
TP7
TP8
TP9
TP10
GND
ULTRASONIC AFE: TDC1000
C11
1nF
3V3
U2
VCOM
VDD1
VDD2
VIO
C8
10nF
GND
CHSEL_THRUHOLE
OSC_8MHZ
MCU_TDC1000CS
MCU_TDC1000RST
MCU_SCLK
MCU_SDI
TDC1000_TRIGGER
CHSEL
CLKIN
COMPIN
CSB
EN
PGAIN
RESET
RX1
RX2
SCLK
SDI
TRIGGER
ERRB
LNAOUT
PGAOUT
RREF
RTD1
RTD2
SDO
START
STOP
TX1
TX2
GND
ERRB_THRUHOLE
TP2 TP3
MCU_SDO
TDC1000_START
TDC1000_STOP
R12
1K
R11
1K
C4
330pF
C2
330pF
RX1
RX2
R16
1k
C10
47pF
R15
5k
C9
47pF
C1
330pF
C3
330pF
R2
1K
R1
1K
TDC1000PW
GND
GND
GND
TIME OF FLIGHT: TDC7200
C5
0.1uF
U1
VDD
MCU_TDC7200EN
TDC1000_START
TDC1000_STOP
OSC_8MHZ
ENABLE
START
STOP
CLOCK
MCU_TDC7200CS
MCU_SCLK
MCU_SDI
MCU_SDO
CS
SCLK
DIN
DOUT
VREG
INT
TRIGG
NC
GND
C6
1uF
R3
1K
MCU_TDC7200INT
TDC1000_TRIGGER
TP1
TDC7200PWR
GND
GND
MCU: ESP32 TINYS3
TP4 TP5 TP6
U3
MCU_SDI
MCU_SDO
MCU_SCLK
IO35
IO37
IO36
IO34
IO9
IO8
IO7
IO6
RST
GND
TX
RX
VBAT
GND
5V
3V3
IO1
IO2
IO3
IO4
IO5
IO21
IO0
MCU_TDC1000RST
MCU_TDC1000CS
MCU_TDC7200CS
MCU_TDC7200INT
MCU_TDC7200EN
MCU_LED
TinyS3_Symbol
GND
STATUS LED
VBAT
1-VDD
LED1
WS2812B
VDD
4-DIN
DI
GND
DO
2-DOUT
3-GND
R7
330
MCU_LED
GND