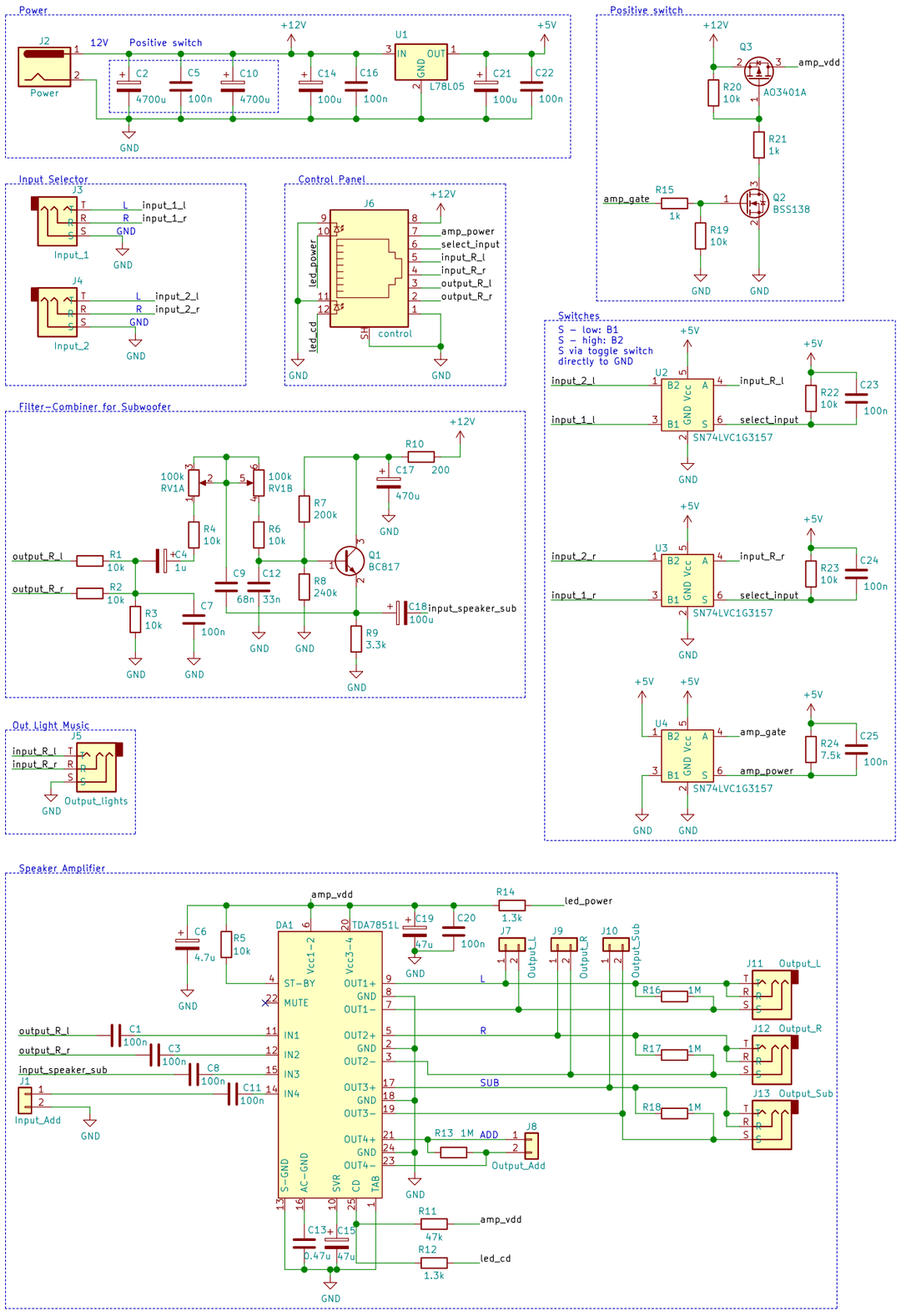

piro.tex
Sheet: /
File: music_amplifier_v3.sch

Title: music_amplifier

Size: A3	Date: 2023-06-26	Rev: v3.2
KiCad E.D.A. eeschema (5.1.7)-1		Id: 1/1