Proceeding of the IEEE
International Conference on Robotics and Biomimetics (ROBIO)
Shenzhen, China, December 2013

Simulation and Control of a Two-wheeled Self-balancing Robot

Wei An[1] and Yangmin Li[12]*, *Senior Member, IEEE*

***Abstract*—**A two-wheeled self-balancing robot is a special type of wheeled mobile robot, its balance problem is a hot research topic due to its unstable state for controlling. In this paper, human transporter model has been established. Kinematic and dynamic models are constructed and two control methods: Proportional-integral-derivative (PID) and Linear-quadratic regulator (LQR) are implemented to test the system model in which controls of two subsystems: self-balance (preventing system from falling down when it moves forward or backward) and yaw rotation (steering angle regulation when it turns left or right) are considered. PID is used to control both two subsystems, LQR is used to control self-balancing subsystem only. By using simulation in Matlab, two methods are compared and discussed. The theoretical investigations for controlling the dynamic behavior are meaningful for design and fabrication. Finally, the result shows that LQR has a better performance than PID for self-balancing subsystem control.

I. INTRODUCTION

In recent years, two-wheeled inverted pendulum robot has been developed quickly. Self-balancing robot like the Segway has been absolutely recognized and used as a human transporter especially for policeman. It is an ideal object of mechatronics, which includes electronic device and embedded control. A small mobile inverted pendulum called JOE [1] is controlled by a joystick, which can be kept in balance whenever moving and turning. A feedback control educational prototype HTV [2] is developed, which can move either on the ground or on the sloped surface. It has great robust and matured mechanical structure. But it is a little bit of less comfortable compared to Segway. Segway [7] is fabricated as a first human transporter. Lego company designed a LegWay robot [8]. In Legway robot, the differential driven method has been brought into design. So the robot could move either on inclined plane or irregular surface by using remote control operation. A simple self-balancing robot with Lego is constructed, which includes AVR controller and some sensors [9]. A low cost self-balancing vehicle has been developed in Brno university [10]. An intelligent two-wheeled robot called Balance Bot [11] is made. Then the obstacle function can be implemented. Many researchers and engineers are working on that because of its unstable nature, high order multi-variables, nonlinear and strong coupling properties and mobility [12]. The two-wheeled robot is the combination of wheeled mobile robot and inverted pendulum system. It also brings the concept of creating a transporter for human. The inverted pendulum is not actuated
by itself, it uses the gyroscopes and accelerometers to sense the inclination off the vertical axis. In order to overcome the inclination, the controller generates torque signals to each motor for preventing system from falling down to the ground. It is a control model in which the object can be controlled only by adding loads on it. This kind of novel challenge is implemented and such controller has attracted interests of many researchers.

Although there are many research works in this field [14]-[17], only few of them have developed the big human transporter vehicles [2], [7], [10]. Even though some researches focus on the human transporter vehicles, but none of them made clear comparisons between the PID and the LQR control methods [13]. The following discussions will be around these topics. Based on the dynamic theory, we will analyze self-balance system, establish the mathematical model, and explain both the proportional-integral-derivative (PID) and linear-quadratic regulator (LQR) control theories in detail. Eventually, the simulation will be performed, which demonstrates that LQR has a better performance in controlling this kind of system.

II. MECHANICAL DESIGN

In this model, the structure of a self-balancing robot is exp ressed. The robot is able to afford a maximum 100kg load. If a big load is added to the robot, it will have a large inertial.

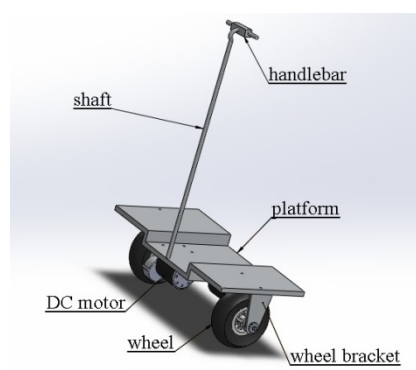

Fig. 1. A model of the robot via Solidworks.

Here, we use two DC motors of 24V, 24A with 1:6 gear ratio. The two motor controllers with 24V power supply export currents with the maximum of 30A to control the two DC motors through PWM signal. The motors and tires are combined together through chain transmission. It must be sure that the axes of them are parallel. We adopt Atemega128A (AVR series 8-bit RISC MCU) for

This work was supported in part by National Natural Science Foundation of China (Grant No. 61128008), Macao Science and Technology Development Fund (Grant NoS. 016/2008/A1 and 108/2012/A3), Research Committee of University of Macau under Grant Nos.: MYRG183(Y1-L3)FST11-LYM and MYRG203(Y1-L4)-FST11-LYM).

W. An and Y. Li are with [1]Department of Electromechanical Engineering, University of Macau, Taipa, Macao SAR, China.

Y. Li is also with [2]School of Mechanical Engineering, Tianjin University of Technology, Tianjin 300191, China. *Corresponding author e-mail: ymli@umac.mo.

978-1-4799-2744-9/13/$31.00 ©2013 IEEE

microcontroller because it has good functionality of rapid data transfer and low cost.

In mechanical structure design, the lower part is consisted of wheels, motors, wheel brackets and platform. The upper part is steer bar which is used to turn the body system. In the mathematic model, the variables are defined as follows:

- Center of mass: c
- Mass of body system: m_b
- Mass of wheel: m_w
- Wheel radial: r
- Distance between center mass of the body and wheel axle: L
- Motor gear ratio: n
- Pitch angle: θ_b
- Distance between two wheels: d
- Angle velocity of left wheel: $\dot{\theta}_{lw}$
- Angle velocity of right wheel: $\dot{\theta}_{rw}$
- Momentum of inertia of the body rotating along center of wheel (z-axis): J_{vwc}
- Momentum of inertia of the body rotating along y-axis: J_{vy}
- Momentum of inertia of wheels rotating along y-axis: J_y
- Momentum of inertia of wheel rotating along z-axis: J_z
- Momentum of inertia of the rotor of the motor: J_m
- Friction coefficient between wheel and ground: μ_1
- Friction coefficient in wheel axle: μ_2
- Yaw angle: δ
- Motion of lower part: s
- Angle of the left wheel with reference to ground: $\alpha = \theta_{lw} - \theta_b$
- Angle of the right wheel with reference to ground: $\beta = \theta_{rw} - \theta_b$

III. KINEMATICS MODEL OF THE ROBOT

The motion of the overall system can be described as three parts: inclination speed V_1 caused by the operator, rotation speed V_2 along Y axis acted by operator and physical speed V_3 caused by wheel rotation. Each part can be decoupled into three directional axis x, y, z as shown in Fig. 2.

$$V_{1x} = L\dot{\theta}_b \cos\theta_b \cos\delta \tag{1}$$

$$V_{1y} = -L\dot{\theta}_b \sin\theta_b \tag{2}$$

$$V_{1z} = L\dot{\theta}_b \cos\theta_b \sin\delta \tag{3}$$

$$V_{2x} = \frac{r\left(\dot{\theta}_{lw} + \dot{\theta}_{rw}\right)}{2}\cos\delta \tag{4}$$

$$V_{2y} = 0 \tag{5}$$

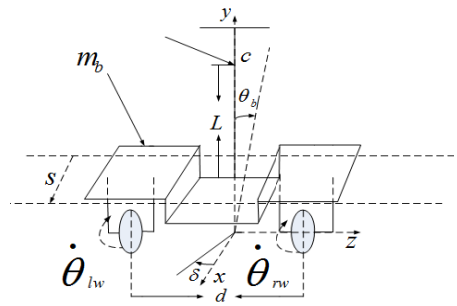

(a)

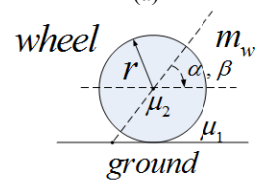

(b)

Fig. 2. (a) Free body diagram of the overall system, (b) Free body diagram of the wheel.

$$V_{2z} = \sin\delta \frac{r\left(\dot{\theta}_{lw} + \dot{\theta}_{lw}\right)}{2} \tag{6}$$

$$V_{3x} = \frac{r\left(\dot{\theta}_{lw} - \dot{\theta}_{rw}\right)}{d} L \sin\theta_b \sin\delta \tag{7}$$

$$V_{3y} = 0 \tag{8}$$

$$V_{3z} = L \sin\theta_b \cos\delta \frac{r\left(\dot{\theta}_{lw} - \dot{\theta}_{rw}\right)}{2} \tag{9}$$

In calculating the total kinetic energy, the speed of the whole system should be described as the sum of those three-axis components: V_x, V_y, and V_z.

$$V_x = V_{1x} + V_{2x} + V_{3x} = L\dot{\theta}_b \cos\theta_b \cos\delta + \frac{r\left(\dot{\theta}_{lw} + \dot{\theta}_{rw}\right)}{2} + \frac{r\left(\dot{\theta}_{lw} - \dot{\theta}_{rw}\right)}{2} L \sin\theta_b \sin\delta \tag{10}$$

$$V_y = -L\dot{\theta}_b \sin\theta_b \tag{11}$$

$$V_z = V_{1z} + V_{2z} + V_{3z} = L\dot{\theta}_b \cos\theta_b \sin\delta + \sin\delta \frac{r\left(\dot{\theta}_{lw} + \dot{\theta}_{rw}\right)}{2} + L \sin\theta_b \cos\delta \frac{r\left(\dot{\theta}_{lw} - \dot{\theta}_{rw}\right)}{2} \tag{12}$$

IV. DYNAMICS MODEL OF THE ROBOT

A. Kinetic Energy of Overall System

The body of the robot system is composed of the lower and the upper part. Since motors are mounted on the body, the mass of body is actually the sum of body mass and motor masses.

The kinetic energy of wheels can be written as:

$$k_w = \left(k_{lw}+k_{L|r}+k_{L|z}\right)+\left(k_{rw}+k_{r|r}+k_{r|z}\right) = \frac{1}{2}\left(m_w r^2+J_y\right)\left(\dot{\theta}_{lw}^2+\dot{\theta}_{rw}^2\right)+\frac{1}{4}m_w r^2\left(\dot{\theta}_{lw}-\dot{\theta}_{rw}\right)^2 \tag{13}$$

where K_{lw} is the translational kinetic energy of the left wheel, K_{rw} is the translational kinetic energy of the right wheel. The rotational kinetic energies for each wheel are $K_{L\mathrm{lr}}$ and $K_{r\mathrm{lr}}$. $K_{L\mathrm{lz}}$ and $K_{r\mathrm{lz}}$ are the kinetic energies of the left wheel and the right wheel respectively when the wheels rotate along the z-axis.

The total kinetic energy of the body can be expressed as:

$$\begin{aligned} k_v &= k_{vm}+k_{vy}+k_{vw} = \frac{1}{8}m_w r^2\left(\dot{\theta}_{lw}+\dot{\theta}_{rw}\right)^2 \\ &+\frac{1}{2}\left(m_v L^2+J_{vwc}\right)\dot{\theta}_b^2+\frac{1}{2}m_v Lr\dot{\theta}_b\left(\dot{\theta}_{lw}+\dot{\theta}_{rw}\right)\cos\theta_b \\ &+\frac{1}{2}\frac{R^2}{D^2}\left(m_v L^2\sin^2\theta_b+J_{vy}\right)\left(\dot{\theta}_{lw}-\dot{\theta}_{rw}\right)^2 \end{aligned} \tag{14}$$

where K_{vw} is the kinetic energy of the body when it rotates along the center of wheel, K_{vy} is the kinetic energy of the body when it rotates along the y- axis, and K_{vm} is the kinetic energy of the lower part when it rotates along the y-axis.

The kinetic energy of the rotor of the motor is:

$$k_m=\frac{1}{2}J_m n^2\left[\left(\dot{\theta}_{lw}-\dot{\theta}_b\right)^2+\left(\dot{\theta}_{rw}-\dot{\theta}_b\right)^2\right] \tag{15}$$

The total kinetic energy k of overall system can be divided into three parts: the wheel kinetic energy k_w, the body kinetic energy k_v and the kinetic energy of the rotor of the motor k_m.

$$k=k_m+k_v+k_w \tag{16}$$

Substituting $\dot{\theta}_{lw}$ and $\dot{\theta}_{rw}$ by

$$\dot{\theta}_{lw}-\dot{\theta}_b=\dot{\alpha}\,,\ \dot{\theta}_{rw}-\dot{\theta}_b=\dot{\beta}\,. \tag{17}$$

Then the equation can be represented as:

$$\begin{aligned} k &= \left[\frac{1}{2}\left(m_w r^2+J_z\right)+\frac{1}{2}r^2\left(\frac{m_w}{2}+\frac{m_v L^2\sin^2\theta_b+J_{vy}}{D^2}\right)+\frac{1}{16}J_m n^2 m_w r^2\right] \\ &\left(\dot{\alpha}^2+\dot{\beta}^2\right)+\left[m_v r^2+J_z+\frac{1}{2}(m_v L^2+J_{vwc})+m_v Lr\cos\theta_b+\frac{1}{2}m_v r^2\right]\dot{\theta}_b^2 \\ &+\left[m_w r^2+J_z+\frac{1}{2}m_v Lr\cos\theta_b+\frac{1}{2}m_w r^2\right]\dot{\theta}_b\left(\dot{\alpha}+\dot{\beta}\right) \\ &+\left[\frac{1}{4}m_w r^2-r^2\left(\frac{m_w}{2}+\frac{m_v L^2\sin^2\theta_b+J_{vy}}{D^2}\right)\right]\dot{\alpha}\dot{\beta} \end{aligned} \tag{18}$$

B. Potential and Dissipation Energy

Potential energy of the whole system is

$$U=m_v gL\cos\theta_b \tag{19}$$

Dissipation energy of the whole system is

$$G=\frac{1}{2}\mu_2\left[\dot{\alpha}^2+\dot{\beta}^2+2\left(\dot{\alpha}+\dot{\beta}\right)\dot{\theta}_b+2\dot{\theta}_b\right]+\frac{1}{2}\mu_2\dot{\alpha}^2+\frac{1}{2}\mu_2\dot{\beta}^2 \tag{20}$$

C. The Lagrange Equation

$$\begin{aligned} &\frac{d}{dt}\left(\frac{\partial k}{\partial\dot{\alpha}}\right)-\frac{\partial k}{\partial\alpha}+\frac{\partial U}{\partial\alpha}+\frac{\partial G}{\partial\dot{\alpha}}=\tau_l \\ &\frac{d}{dt}\left(\frac{\partial k}{\partial\dot{\beta}}\right)-\frac{\partial k}{\partial\beta}+\frac{\partial U}{\partial\beta}+\frac{\partial G}{\partial\dot{\beta}}=\tau_r \\ &\frac{d}{dt}\left(\frac{\partial k}{\partial\dot{\theta}_b}\right)-\frac{\partial k}{\partial\theta_b}+\frac{\partial U}{\partial\theta_b}+\frac{\partial G}{\partial\dot{\theta}_b}=-(\tau_l+\tau_r) \end{aligned} \tag{21}$$

where τ_l, τ_r is the reaction torques of the left wheel and the right wheel respectively. Substitute (18), (19), and (20) into (21). Then the nonlinear equation is linearized by Setting

$$\left(\dot{\alpha}-\dot{\beta}\right)^2=0\,,\ \dot{\theta}_b\left(\dot{\alpha}-\dot{\beta}\right)=0\,,\ \dot{\theta}_b{}^2=0\,,\ \sin\theta_b=\theta_b\,,\ \cos\theta_b=1\,. \tag{22}$$

After that we can obtain the state equation

$$\begin{bmatrix}\dot{\theta}_b\\ \dot{\alpha}\\ \dot{\beta}\\ \ddot{\theta}_b\\ \ddot{\alpha}\\ \ddot{\beta}\end{bmatrix}=\mathrm{A}\begin{bmatrix}\theta_b\\ \alpha\\ \beta\\ \dot{\theta}_b\\ \dot{\alpha}\\ \dot{\beta}\end{bmatrix}+\mathrm{Bu} \tag{23}$$

where

$$A=\begin{bmatrix} 0&0&0&&1&0&0\\ 0&0&0&&0&1&0\\ 0&0&0&&0&0&1\\ A_{41}&0&0&A_{44}&A_{45}&A_{46}\\ A_{51}&0&0&A_{54}&A_{55}&A_{46}\\ A_{61}&0&0&A_{64}&A_{65}&A_{66}\end{bmatrix},\ B=\begin{bmatrix}0&0\\0&0\\0&0\\B_{41}&B_{42}\\B_{51}&B_{52}\\B_{61}&B_{62}\end{bmatrix},$$

$$u=\begin{bmatrix}\tau_l\\ \tau_r\end{bmatrix}.$$

V. Robot System Control

The control methods applied to this robot system are PID and LQR. In self-balance control, three output variables are to be considered. But in yaw control, only one variable is to be considered. We use both two methods to test the self-balance control but just apply PID in yaw control. After simulating the dynamic robot system by using those two control methods, their performances can be observed.

A. Robot PID Control System

PID control method has been widely used in the feedback control system. It is a very typical way of control strategy in industry. PID is composed of three parts: (1). The proportional part which is used in the purpose of error

elimination. (2). The integral part which is used to average past error. (3). The derivative part is to predict the further error through past error variation. The final control value u can be calculated by simply adding these three terms together

$$u=k_p e(t)+k_i \int e(t)dt+k_d \frac{de(t)}{dt}. \quad (24)$$

The desired output performance can be achieved by tuning and designing three gains. There are many methods of choosing suitable values of the three gains to achieve the satisfied system performance.

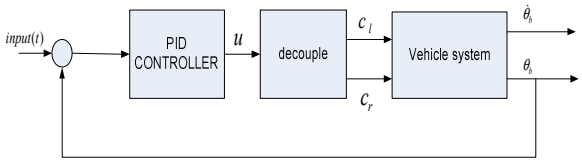

Fig. 3. Robot Control System.

Fig.3 shows the whole dynamic control system. We set the sample time T equal to 0.05s. We denote u as the control value which is calculated from PID controller and further decoupled it into c_l and c_r(the input torques for right and left motors respectively) for controlling the two motors. u_1 is used in self-balance control and u_2 is used in yaw control. u_1, u_2 are transformed to c_l, c_r in the process called decoupling:

$$\begin{bmatrix} c_l \\ c_r \end{bmatrix} = \begin{bmatrix} 0.5 & 0.5 \\ 0.5 & -0.5 \end{bmatrix} \begin{bmatrix} u_1 \\ u_2 \end{bmatrix} \quad (25)$$

In this case, the overall system can be divided into self-balancing subsystem and yaw control subsystem. The control theory used in two different subsystems here is the PD control method.

$$u=k_p e(t)+k_d \frac{de(t)}{dt}, \quad t=kT. \quad (26)$$

In self-balance control, data from accelerometer and gyroscopes are integrated to get the tilt angle Θ_b and velocity $\dot{\Theta}_b$. With those data, u_1 can be further calculated by

$$u_1 = -k_p \theta_b(k) - k_d(\theta_b(k) - \theta_b(k-1)) \quad (27)$$

In yaw control, the direction of the robot can be turned when operator steers the handle bar. We denote the actual yaw rates as $\dot{\delta}_{\text{actual}}$ and desired yaw rates as $\dot{\delta}_{\text{desired}}$. Our target is to make the actual yaw rates from sensors approach to the target yaw rates as soon as possible through the control system. Eventually error term between input and feedback signal can be eliminated by selecting certain values of k_p and k_d.

For the control theory, we use the PD control again:

$$\begin{aligned} u_2 &= k_p\left(\dot{\delta}_{desire}(k) - \dot{\delta}_{actual}(k)\right) + \\ & k_d\left(\dot{\delta}_{desire}(k) - \dot{\delta}_{actual}(k) - \dot{\delta}_{desire}(k-1) + \dot{\delta}_{actual}(k-1)\right) \end{aligned} \quad (28)$$

B. LQR Control

The linear-quadratic regulator (LQR) is to run a dynamic system under optimal solution. We assume that the robot system has the state equation

$$\dot{x}(t) = Ax(t) + Bu \quad (29)$$

where A and B are two constant matrices calculated from the dynamics model. And this state equation can also be explained as

$$u = -Kx + v \quad (30)$$

Substituting (30) to (29), the state equation becomes

$$\dot{x} = (A - BK)x + Bv \quad (31)$$

Here we assume $v = 0$. In order to find the optimum control vector $u'(t)$ under two chosen constants Q and R, the function

$$J = \frac{1}{2}\int_0^\infty (x^T Q x + u^T R u)\, dt \quad (32)$$

must be minimum. Where Q is positive semi-definite ($x^T Q x \geq 0$) and R to be positive definite ($u^T R u > 0$). In this robot system, we use output as feedback signal.

Substitute (30) into (32), we have

$$J = \frac{1}{2}\int_0^\infty x^T (Q + K^T R K) x dt \quad (33)$$

J can be minimum as long as a suitable K be calculated. In order to calculate K, we assume that there exists a constant matrix P such that

$$\frac{d}{dt}(x^T P x) = -x^T (Q + K^T R K) x \quad (34)$$

By (31), this equation can be simplified to

$$A^T P + PA + Q + K^T R K - K^T B^T P - PBK = 0 \quad (35)$$

Then we set

$$K = R^{-1} B^T P \quad (36)$$

The (35) can be changed to

$$PA + A^T P + PB^{-1} RBP + Q = 0 \quad (37)$$

From equation (36) and (37), P and K can be calculated, Finally $u'(t)$ can be calculated in the following equation:

$$U' = u' = -Kx = -R^{-1} B^T P x \quad (38)$$

and minimum J can be reached.

The whole LQR control process is shown in Fig.4. We can see that three output values have been chosen as feedback which can be compared with reference input. And after multiplication by vector K, the control input is sent to physical system.

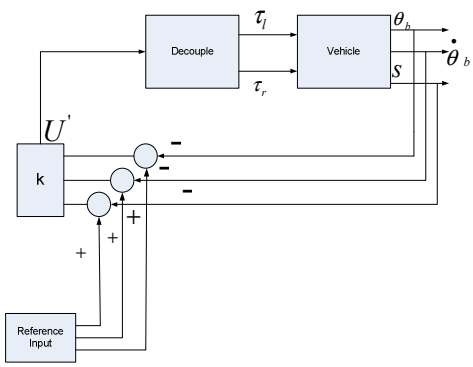

Fig. 4. LQR control of robot.

VI. ROBOT SYSTEM SIMULATION

Both PID with LQR are tried and compared in the aspects of the performance of the control system. Then the better one is adopted in our robot system and a more accurate and fast system response can be achieved. Essentially, system can be stable within 4s. Otherwise, the operation will be failed and cause physical injury to human.

A. Simulation of PID Control

The self-balancing subsystem described by

$$\dot{x}_1 = A_1 x_1 + B_1 u_1 \,,\; Y_1 = C_1 x \,. \tag{39}$$

which is in detail as

$$\begin{bmatrix} \theta_b \\ \dot{\theta}_b \\ \dot{s} \end{bmatrix} = \begin{bmatrix} 0 & 1 & 0 \\ 25 & -1.85 & 19 \\ -43 & -0.17 & 1.075 \end{bmatrix} x_1 + \begin{bmatrix} 0 \\ -0.3 \\ 0.4 \end{bmatrix} [\tau_l + \tau_r]$$

$$Y_1\left(\begin{bmatrix} \theta_b \\ \dot{\theta}_b \end{bmatrix}\right) = C_1 x_1,\; c_1 = \begin{bmatrix} 1 & 0 & 0 \\ 0 & 1 & 0 \end{bmatrix}.$$

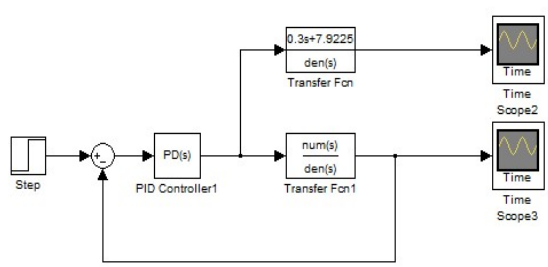

(a)

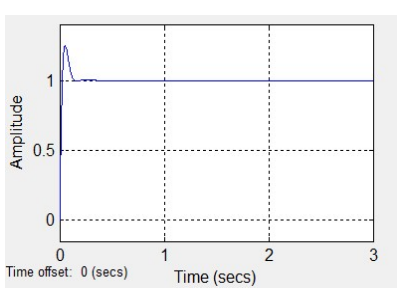

(b)

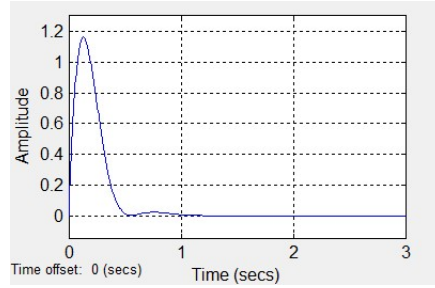

(c)

Fig. 5. (a) PID simulation diagram for self-balancing control, (b) Result of tilt angle, (c) Result of tilt angle rate.

Fig. 5 shows the performances of the inclined angle and the inclined angle velocity in self-balance control. While the rider is moving forward and backward, PD controller outperforms a relative fast steady-state response.

The yaw control subsystem is:

$$\dot{x}_2 = A_2 x_2 + B_2 u_2 \tag{40}$$

which is $\ddot{\delta}=A_2\dot{\delta}+B_2[\tau_l - \tau_r]$, where

$$A_2 = \frac{-(\mu_1+\mu_2)}{2(m_w r^2 + J_z + 2\frac{r^2}{d^2}J_{vy} + J_m n^2)} = -0.12,$$

$$B_2 = \frac{r}{d(2m_w r^2 + J_z + 2\frac{r^2}{d^2}J_{vy} + J_m n^2)} = 0.07.$$

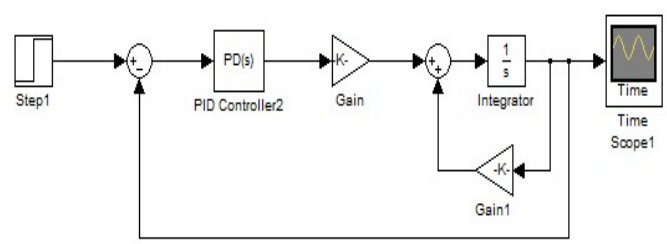

(a)

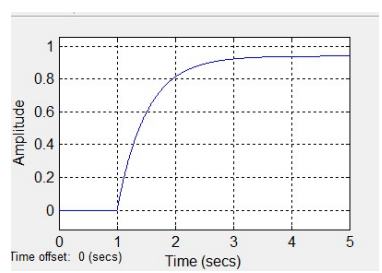

(b)

Fig. 6. (a) PD simulation diagram for yaw control, (b) Simulation result of yaw angle rate.

Fig. 6 shows the system result under yaw control circumstance. The subsystem has relatively slow steady-state by using PD controller.

B. Simulation of LQR Control

After trying the values of Q and R for many times, we conclude that k_1 associated with inclination angle would be either positive or negative. However, to approach stable system, k_2, k_3 can never be negative. If setting a high R value, the response time of system will be relatively low because that would reduce the control ability of the motor. And in the other way, the response time of system would be faster with a lower R value. So we set R equals to 1. Essentially, how to choose a suitable Q, represented by matrix $\begin{bmatrix} a & 0 & 0 \\ 0 & b & 0 \\ 0 & 0 & c \end{bmatrix}$, must be taken into consideration. Where a is associated with tilt angle, b is associated with tilt angle rate and c is associated with system displacement. Setting larger a in the matrix can lead to quick inclination response of the system. In our system, the performance will almost be the same whatever the value of a is taken ranging from 2 to 50 times more of b, or c. Therefore we set the value of Q as $\begin{bmatrix} 200 & 0 & 0 \\ 0 & 10 & 0 \\ 0 & 0 & 10 \end{bmatrix}$. Eventually the gain k can be calculated as [-23.32 19.21 63.85] by applying lqry() function in Matlab. We obtain the simulation result as shown in Fig.7 (b).

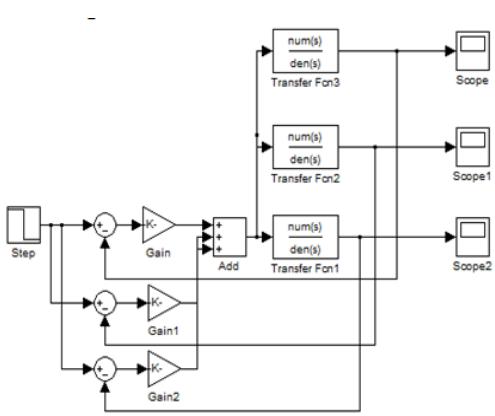

(a)

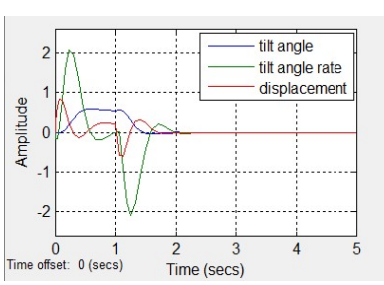

(b)

Fig. 7. (a) LQR simulation diagram, (b) LQR control simulation.

Comparing those two control methods, it is observed that LQR has a better performance than PID in self-balancing control. Since PID can only use one feedback signal to generate the control value, the system will be failed without a precise feedback signal of tilt angle if PID is used. The advantage of LQR is that it can integrate all output state variables (tilt angle, tilt angle rate, position) to calculate the control value. The robot system can still get stabilization from other output state variables signal even though one of state output variables is inaccurate. This allows robot to hold the stabilization in a desired time. We have found that the time to achieve the steady state of robot by LQR is faster than by PID.

VII. Conclusion

In this paper, based on mechanical structure and dynamic models, the modeling and analysis of self-balancing robot are discussed by using Lagrange equation and energy conservation principle, PID and LQR control algorithms are tried. It is concluded that LQR has a better performance than PID in self-balancing control. In our future work, we will use LQR method to control a physical two-wheeled robot to further verify the controller's performance.

References

[1] F. Grasser, A. D. Arrigo, and S. Colombi, "JOE: A mobile, inverted pendulum". *IEEE Trans. Ind. Electron*, vol. 49, pp. 107–114, 2002.

[2] S.-C. Lin and C.-C. Tsai, "Develop of a self-balancing human transportation vehicle for the teaching of feedback control," *IEEE Trans. Education*, vol.52, no.1, pp.157-168, 2009.

[3] T. Tomašić, A. Demetlika, M. Crneković, "Self-balance mobile robot tilter," *Transactions of FAMENA,* vol.36, no.3, pp.23-32, 2012.

[4] F. L. Lewis, *Linear Quadratic Regulator (LQR) State Feedback Design*, 1998.

[5] T. Takei, R. lmamura, S. Yuta, "Baggage transportation and navigation by a wheel inverted pendulum mobile robot," *IEEE Trans. Ind. Electron.*, no.56, pp.3985-3994, 2009.

[6] L. Sun, J. Gan, "Researching of two-wheeled self-balancing robot based on LQR combined with PID," *International Workshop on Intelligent systems and Applications*, pp.1-5, 2010.

[7] http://www.segway.com.

[8] http://www.teamhassenplug.org/robot/legway.

[9] H. Ferdinando, H. Khoswanto, S. Tjokro, "Design and evaluation of two-wheeled balancing robot chassis," *IEEE International Conference on Communications, Computing and Control Applications*, pp.1-6, 2011.

[10] Grepl, R., Zouhar, F., Štěpánek, J., Horák, P. , "The development of a self-balancing vehicle: A platform for education in mechatronics," *Faculty of Mechanical Engineering*, *Brno University of Technology*.

[11] http://www.art-of-invention.com/robotics

[12] S. Kim, S. Kwom, "SDRE based nonlinear optimal control of a two-wheeled balancing robot," *Journal of Institute of Control*, *Robotics and Systems*, pp.1037-1043, 2011.

[13] Y. Yun and Y. Li , "Active vibration control based on a 3-dof dual compliant parallel robot using LQR algorithm," *IEEE/RSJ International Conference on Intelligent RObots and Systems (IROS)*, October 11 - 15, 2009, St. Louis , MO, USA , pp.775-780.

[14] J.-G. Wang and Y. Li, "Analysis on the Interaction between the Nonholonomic Mobile Modular Robot and the Environment," *IEEE International Conference on Robotics and Biomimetics(ROBIO)*, December 18-22, 2009, Guilin, Guangxi, China, pp.86-91.

[15] J.-G. Wang and Y. Li , "Kinematic analysis of a mobile robot with two-body frames," *IEEE International Conference on Information Automation(ICIA)* , June 20-23, 2008, Hunan, China, pp.1073-1078.

[16] Y. Liu and Y. Li, "Dynamics and model-based control for a mobile modular manipulator," *Robotica*, vol. 23, pp. 795-797, 2005.

[17] J.-G.Wang and Y. Li, "Static Force Analysis for a Mobile Humanoid Robot Moving on a Slope," *IEEE International Conference on Robotics and Biomimetics (ROBIO)*, Bangkok, Thailand, February 22-25, 2009, pp.371-376.