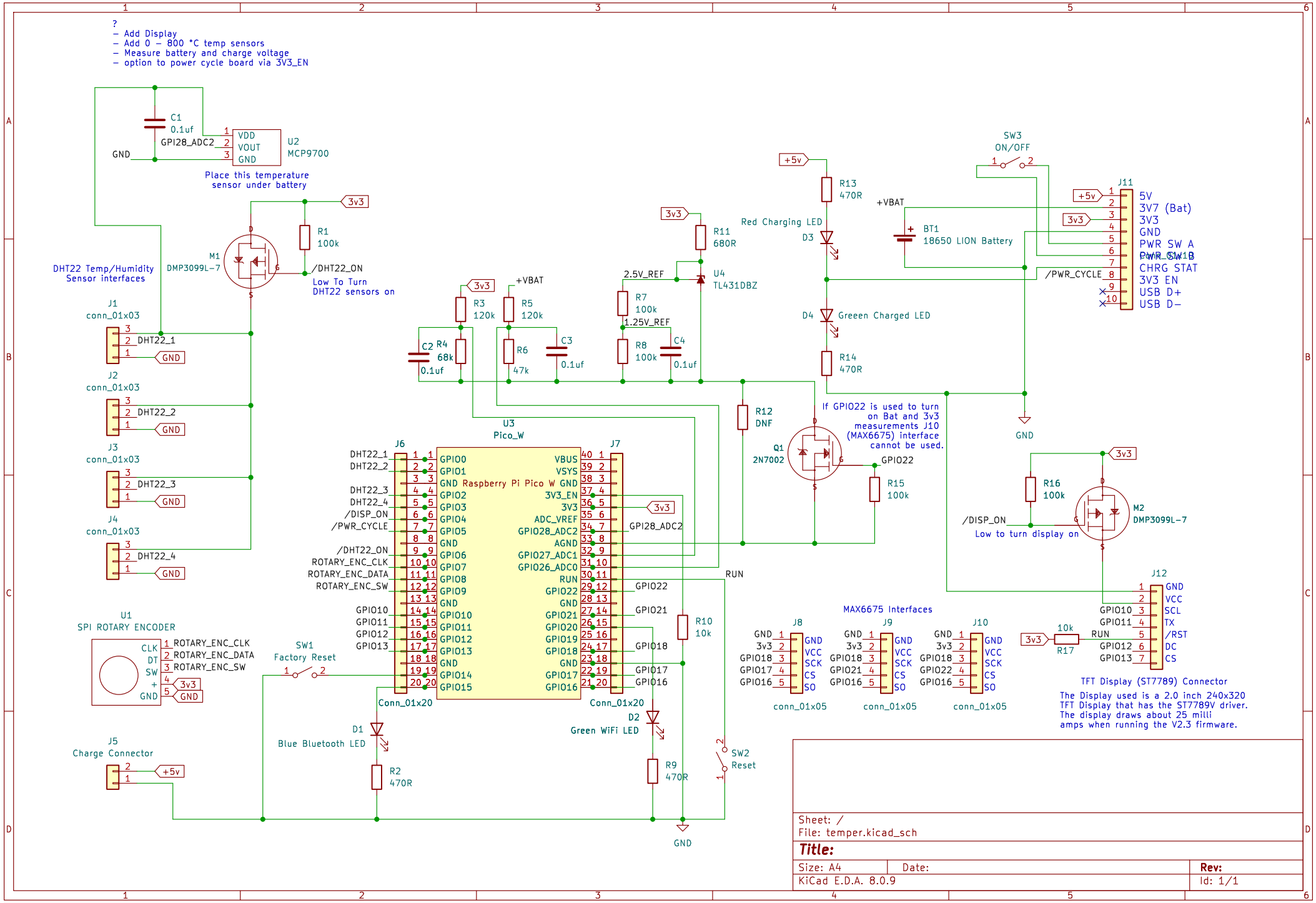
?
– Add Display
– Add 0 – 800 °C temp sensors
– Measure battery and charge voltage
– option to power cycle board via 3V3_EN
C1
0.1uf
GPI28_ADC2
GND
VDD
VOUT
GND
U2
MCP9700
Place this temperature sensor under battery
3v3
R1
100k
M1
DMP3099L-7
/DHT22_ON
Low To Turn DHT22 sensors on
DHT22 Temp/Humidity Sensor interfaces
J1
conn_01x03
DHT22_1
GND
J2
conn_01x03
DHT22_2
GND
J3
conn_01x03
DHT22_3
GND
J4
conn_01x03
DHT22_4
GND
U1
SPI ROTARY ENCODER
CLK
DT
SW
+
GND
ROTARY_ENC_CLK
ROTARY_ENC_DATA
ROTARY_ENC_SW
3v3
GND
J5
Charge Connector
+5v
SW1
Factory Reset
R3
120k
R5
120k
C2
R4
68k
0.1uf
R6
47k
C3
0.1uf
+VBAT
2.5V_REF
R7
100k
1.25V_REF
R8
100k
C4
0.1uf
R11
680R
U4
TL431DBZ
R12
DNF
U3
Pico_W
J6
J7
GPIO0
GPIO1
GND Raspberry Pi Pico W GND
GPIO2
GPIO3
GPIO4
GPIO5
GND
GPIO6
GPIO7
GPIO8
GPIO9
GND
GPIO10
GPIO11
GPIO12
GPIO13
GND
GPIO14
GPIO15
VBUS
VSYS
3V3_EN
3V3
ADC_VREF
GPIO28_ADC2
AGND
GPIO27_ADC1
GPIO26_ADC0
RUN
GPIO22
GND
GPIO21
GPIO20
GPIO19
GPIO18
GND
GPIO17
GPIO16
DHT22_1
DHT22_2
DHT22_3
DHT22_4
/DISP_ON
/PWR_CYCLE
/DHT22_ON
ROTARY_ENC_CLK
ROTARY_ENC_DATA
ROTARY_ENC_SW
GPIO10
GPIO11
GPIO12
GPIO13
GPIO22
GPIO21
GPIO18
GPIO17
GPIO16
Conn_01x20
Conn_01x20
D1
Blue Bluetooth LED
R2
470R
D2
Green WiFi LED
R9
470R
R10
10k
SW2
Reset
GND
RUN
R13
470R
Red Charging LED
D3
D4
Greeen Charged LED
R14
470R
Q1
2N7002
GPIO22
R15
100k
If GPIO22 is used to turn on Bat and 3v3 measurements J10 (MAX6675) interface cannot be used.
+VBAT
BT1
18650 LION Battery
SW3
ON/OFF
J11
5V
3V7 (Bat)
3V3
GND
PWR SW A
PWR SW B
CHRG STAT
3V3 EN
USB D+
USB D–
/PWR_CYCLE
GND
R16
100k
/DISP_ON
Low to turn display on
M2
DMP3099L-7
J12
GND
VCC
SCL
TX
/RST
DC
CS
GPIO10
GPIO11
RUN
GPIO12
GPIO13
10k
R17
MAX6675 Interfaces
J8
J9
J10
GND
3v3
GPIO18
GPIO17
GPIO16
GPIO21
GPIO22
VCC
SCK
CS
SO
conn_01x05
conn_01x05
conn_01x05
TFT Display (ST7789) Connector
The Display used is a 2.0 inch 240x320 TFT Display that has the ST7789V driver. The display draws about 25 milli amps when running the V2.3 firmware.
Sheet: /
File: temper.kicad_sch
Title:
Size: A4
Date:
Rev:
KiCad E.D.A. 8.0.9
Id: 1/1