ESP32 EMU TURBO

Hierarchical root schematic — all sub-sheets linked below

Power Supply

File: 01-power-supply.kicad_sch

Mcu

File: 02-mcu.kicad_sch

Display

File: 03-display.kicad_sch

Audio

File: 04-audio.kicad_sch

Sd Card

File: 05-sd-card.kicad_sch

Controls

File: 06-controls.kicad_sch

Generated by scripts/generate_schematics
Handheld Retro Console

Sheet: /
File: esp32-emu-turbo.kicad_sch

Title: ESP32 Emu Turbo — Root Schematic

Size: A2	Date:	Rev:
KiCad E.D.A. 10.0.0		Id: 1/7

POWER SUPPLY

USB-C -> IP5306 SOP-8 (charge + boost) -> AMS1117-3.3 -> 3.3V rail

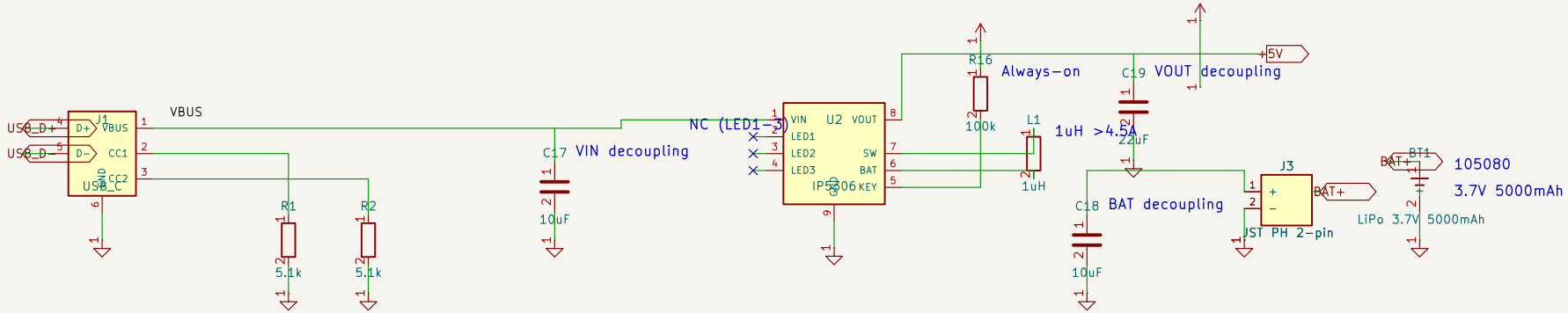

CHARGING INDICATOR LEDs

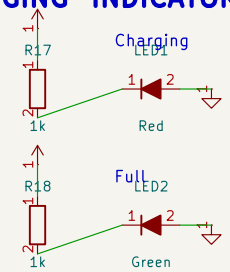

VOLTAGE REGULATOR

5V -> AMS1117-3.3 -> 3.3V (800mA max)

POWER SWITCH

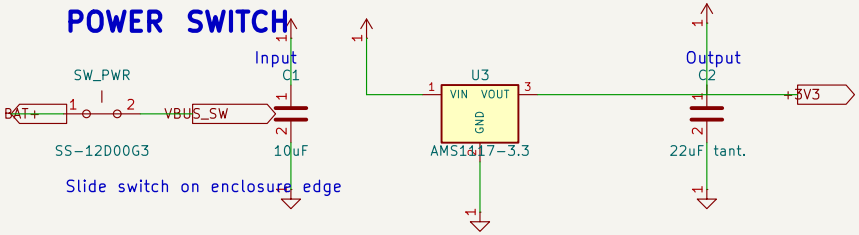

Generated by scripts/generate_schematics
ESP32 Emu Turbo - Handheld Retro Console

Sheet: /Power Supply/
File: 01-power-supply.kicad_sch

Title: Power Supply

Size: A4	Date:	Rev:
KiCad E.D.A. 10.0.0		Id: 2/7

Design Notes:

- IP5306 eSOP-8: integrated charger + synchronous boost (no ext. Schottky)
- 1uH inductor: BAT -> L1 -> SW (>4.5A saturation, shielded)

DISPLAY — ILI9488 4.0in 320x480

8-bit 8080 parallel interface (mandatory for SNES emulation speed)

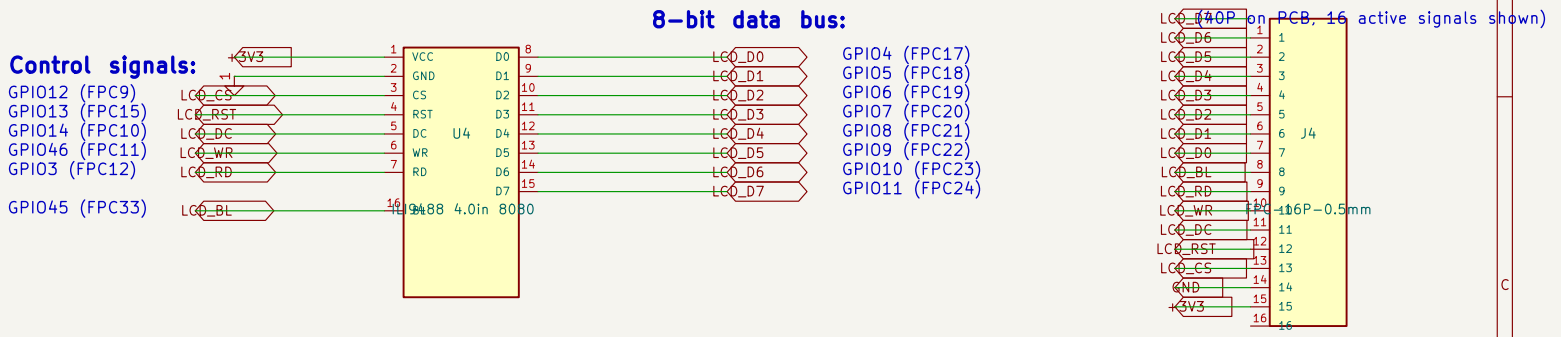

ILI9488 FPC-40P Pin Mapping:

FPC 6,7=VDDI/VDDA(+3V3) 9=CS 10=DC 11=WR 12=RD 15=RESET

FPC 17-24=DB0-DB7 33=LED-A(BL) 34-36=LED-K(GND) 38,39=IM0,IM1(+3V3) 40=IM2(GND)

Interface mode: IM2=0 IM1=1 IM0=1 = 8080 8-bit parallel

- GPIO4-11 form contiguous 8-bit bus for efficient register-level DMA

Generated by scripts/generate_schematics
ESP32 Emu Turbo — Handheld Retro Console

Sheet: /Display/
File: 03-display.kicad_sch

Title: Display — ILI9488 4.0in 8080 Parallel

Size: A4 Date:
KiCad E.D.A. 10.0.0

Rev:
Id: 3/7

STORAGE – Micro SD Card

SPI interface for ROM storage (SNES ROMs up to 6MB)

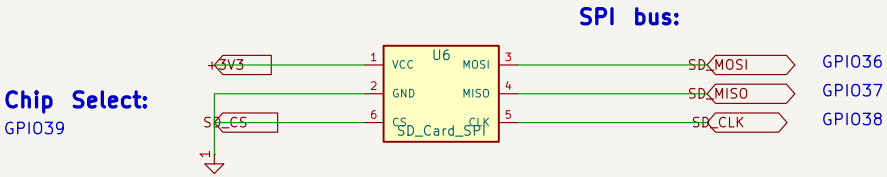

Design Notes:

- SPI bus @ up to 40MHz (ESP32-S3 max for SD)
- SNES ROMs: 256KB to 6MB typical (HiROM/LoROM)
- FAT32 filesystem for easy ROM management via PC
- 3.3V logic: no level shifter needed (module has built-in)
- GPIO36-39 grouped for clean SPI trace routing on PCB

Generated by scripts/generate_schematics
ESP32 Emu Turbo – Handheld Retro Console

Sheet: /Sd Card/
File: 05-sd-card.kicad_sch

Title: Storage – SD Card SPI

Size: A4	Date:	Rev:
KiCad E.D.A. 10.0.0		Id: 4/7

MCU – ESP32-S3-WROOM-1 N16R8

Dual-core LX7 @ 240MHz, 16MB Flash, 8MB PSRAM

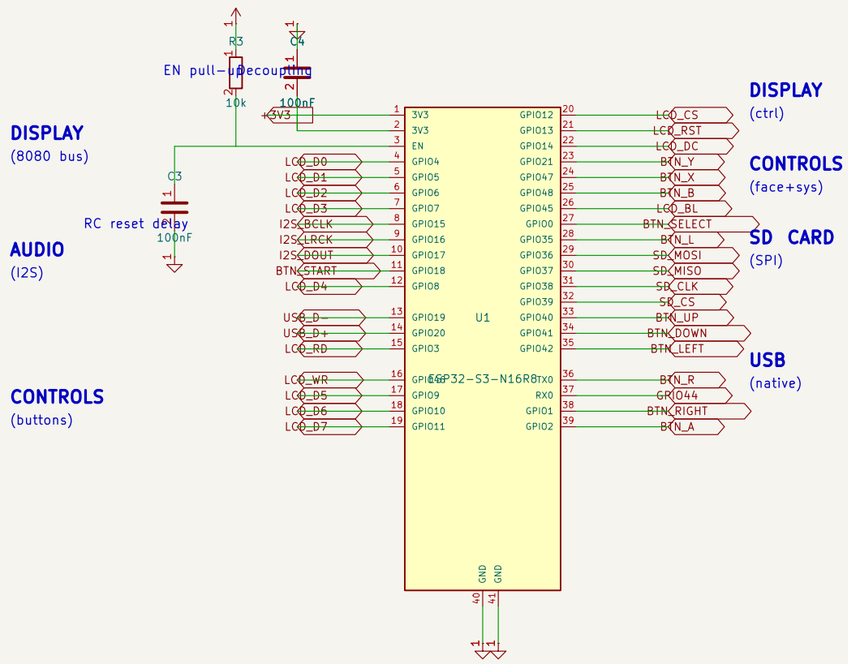

GPIO ASSIGNMENT TABLE

Display (8080 parallel):
GPIO4–11 = D0–D7 (8-bit data bus)
GPIO12=CS GPIO13=RST GPIO14=DC
GPIO46=WR GPIO3=RD GPIO45=BL

Audio (I2S):
GPIO15=BCLK GPIO16=LRCK GPIO17=DOUT

SD Card (SPI):
GPIO36=MOSI GPIO37=MISO GPIO38=CLK GPIO39=

Controls (active low, 10k pull-up):
D-pad: GPIO40=UP 41=DOWN 42=LEFT 1=RIGHT
Face: GPIO2=A 48=B 47=X 21=Y
Sys: GPIO18=START 0=SELECT 35=L 43=R

USB (native, firmware flash + debug):
GPIO19=D- GPIO20=D+

Reserved (do not use):
GPIO26–32 = Octal PSRAM (internal)

Generated by scripts/generate_schematics
ESP32 Emu Turbo – Handheld Retro Console

Sheet: /Mcu/
File: 02-mcu.kicad_sch

Title: MCU – ESP32-S3-WROOM-1 N16R8

Size: A3	Date:	Rev:
KiCad E.D.A. 10.0.0		Id: 5/7

AUDIO OUTPUT

I2S DAC -> PAM8403 Class-D Amplifier -> 28mm 8ohm Speaker

I2S Bus (directly from ESP32-S3):

I2S_BCLK — GPIO15 - Bit Clock (1.411 MHz @ 44.1kHz)

I2S_LRCK — GPIO16 - L/R Word Select (44.1kHz)

I2S_DOUT — GPIO17 - Serial Data Out -> PAM8403

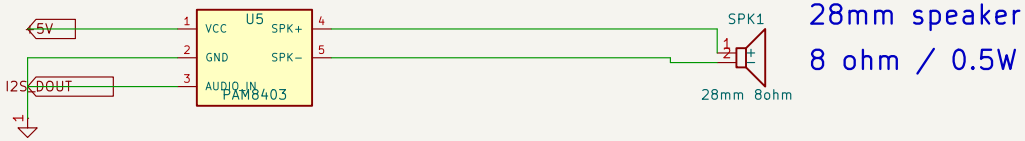

28mm speaker
8 ohm / 0.5W

Design Notes:

- PAM8403: filterless Class-D stereo amplifier (3W per channel max)
- Only one channel used for mono audio
- No external DAC needed: ESP32-S3 has built-in I2S with DMA
- Powered from +5V rail for max headroom (3.3V limits volume)
- DMA-driven audio streaming for low CPU overhead

Generated by scripts/generate_schematics
ESP32 Emu Turbo - Handheld Retro Console

Sheet: /Audio/
File: 04-audio.kicad_sch

Title: Audio - I2S -> PAM8403 -> Speaker

Size: A4	Date:	Rev:
KiCad E.D.A. 10.0.0		Id: 6/7

CONTROLS — 12 Tact Switches

Active-low with 10k pull-up + 100nF debounce per button

D-PAD

UP (GPIO40)

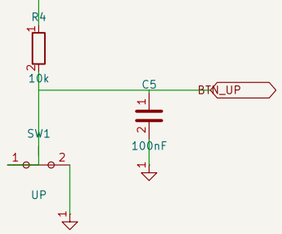

DOWN (GPIO41)

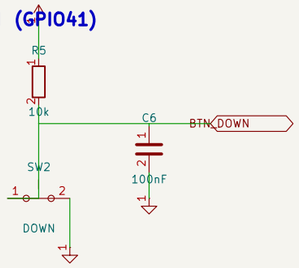

LEFT (GPIO42)

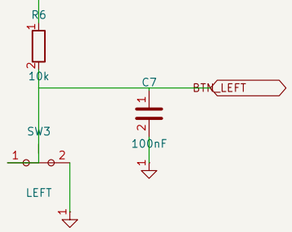

RIGHT (GPIO1)

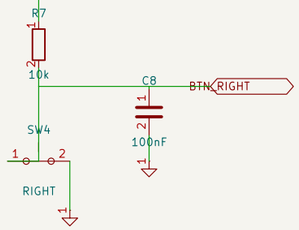

FACE BUTTONS (ABXY)

A (GPIO2)

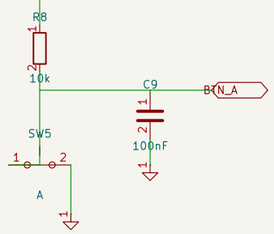

B (GPIO48)

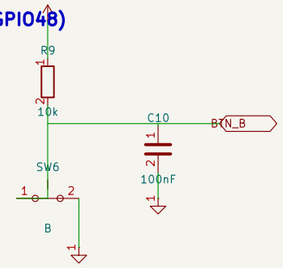

X (GPIO47)

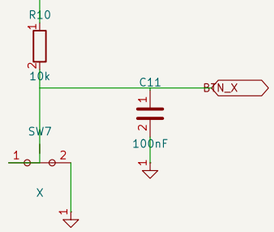

Y (GPIO21)

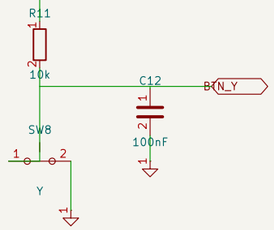

SYSTEM + SHOULDER

START (GPIO18)

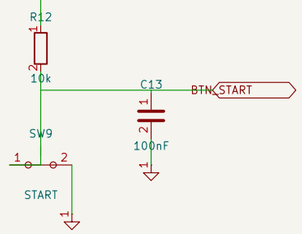

SELECT (GPIO0)

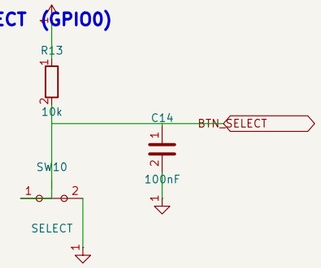

L (GPIO35)

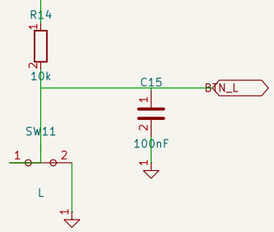

R (GPIO43)

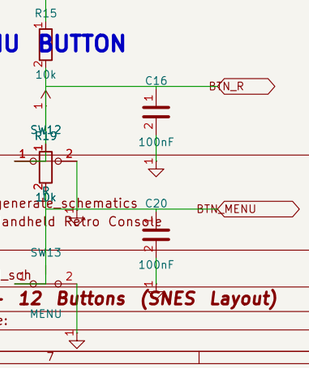

MENU BUTTON

Generated by scripts/generate_schematics
ESP32 Emu Turbo — Handheld Retro Console

Sheet: /Controls/
File: 06-controls.kicad_sch

Title: Controls — 12 Buttons (SNES Layout)

Size: A3	Date:	Rev:
KiCad E.D.A. 10.0.0		Id: 7/7

BUTTON CIRCUIT (repeated 12x):