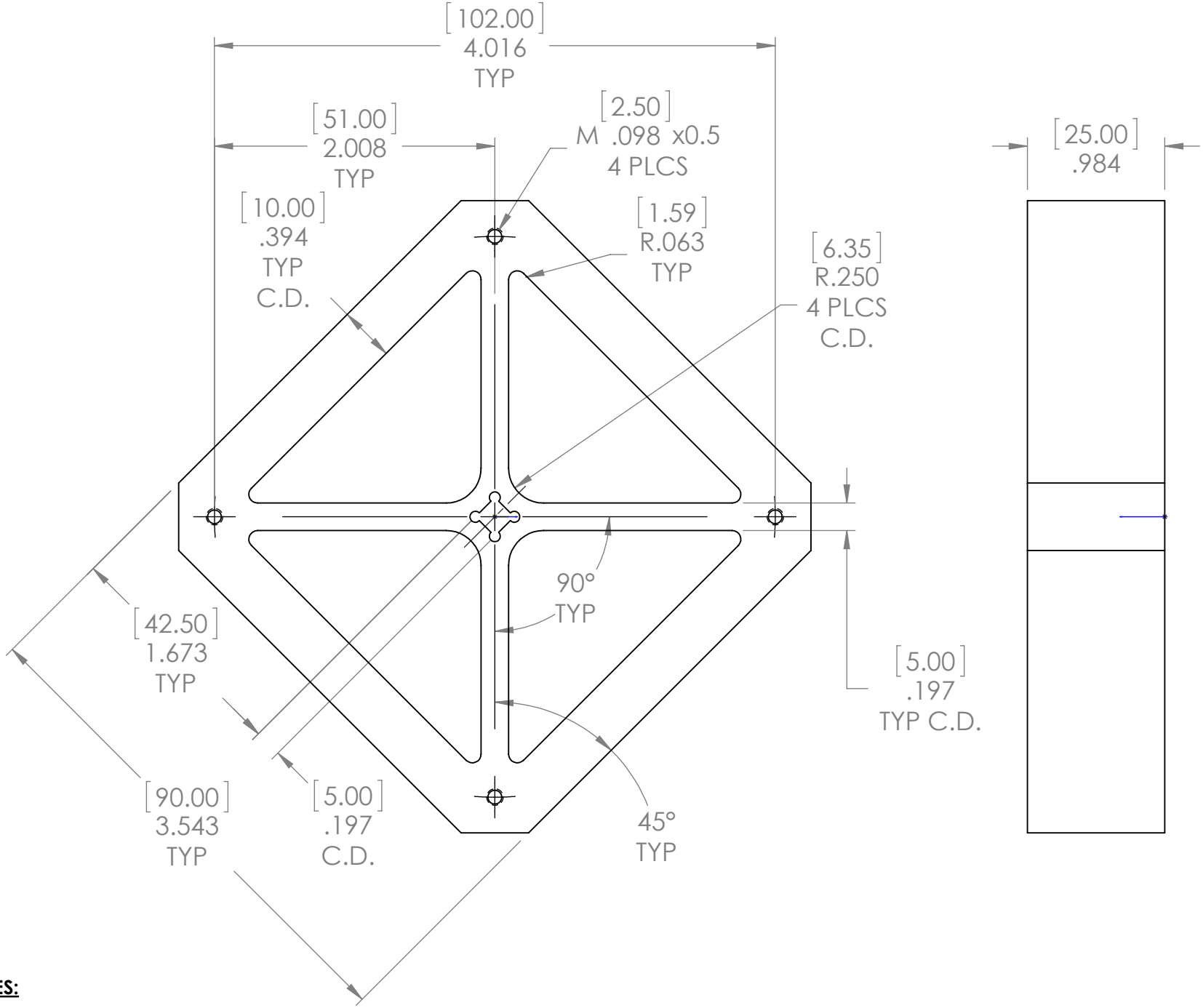

NOTES:

1. MATERIAL: 5052-H34 ALUMINUM
2. NO BURRS OR SHARP EDGES ALLOWED.
3. (C.D.) DENOTES CRITICAL DIMENSIONS.
4. DIMENSIONS IN [BRACKETS] ARE IN MILLIMETERS.