Note: Some K-Offset sensor require 5V or more and may require 10 to 100ma.

Bias resistor for flow sensor

VS = 35V, R1 = ~ 5.6k
VS = 12V, R1 = ~ 2k
VS = 5V, R1 = ~ 1k
VS = 3.3V, R1 = ~ 1k

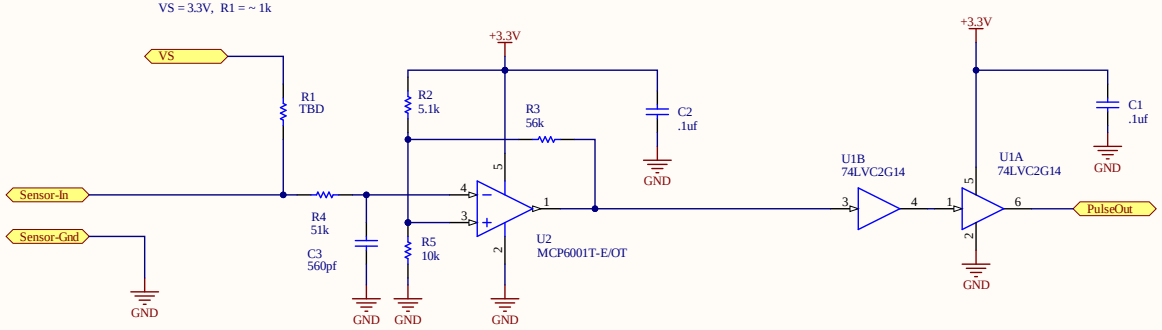

Title			Altium Limited L3, 12a Rodborough Rd Frenchs Forest NSW Australia 2086
Size: B	Number:	Revision:	
Date: 4/6/2022	Time: 2:27:38 PM	Sheet of	
File: C:\Users\lafleur\Desktop\Altium Projects\FlowSensor.SchDoc			