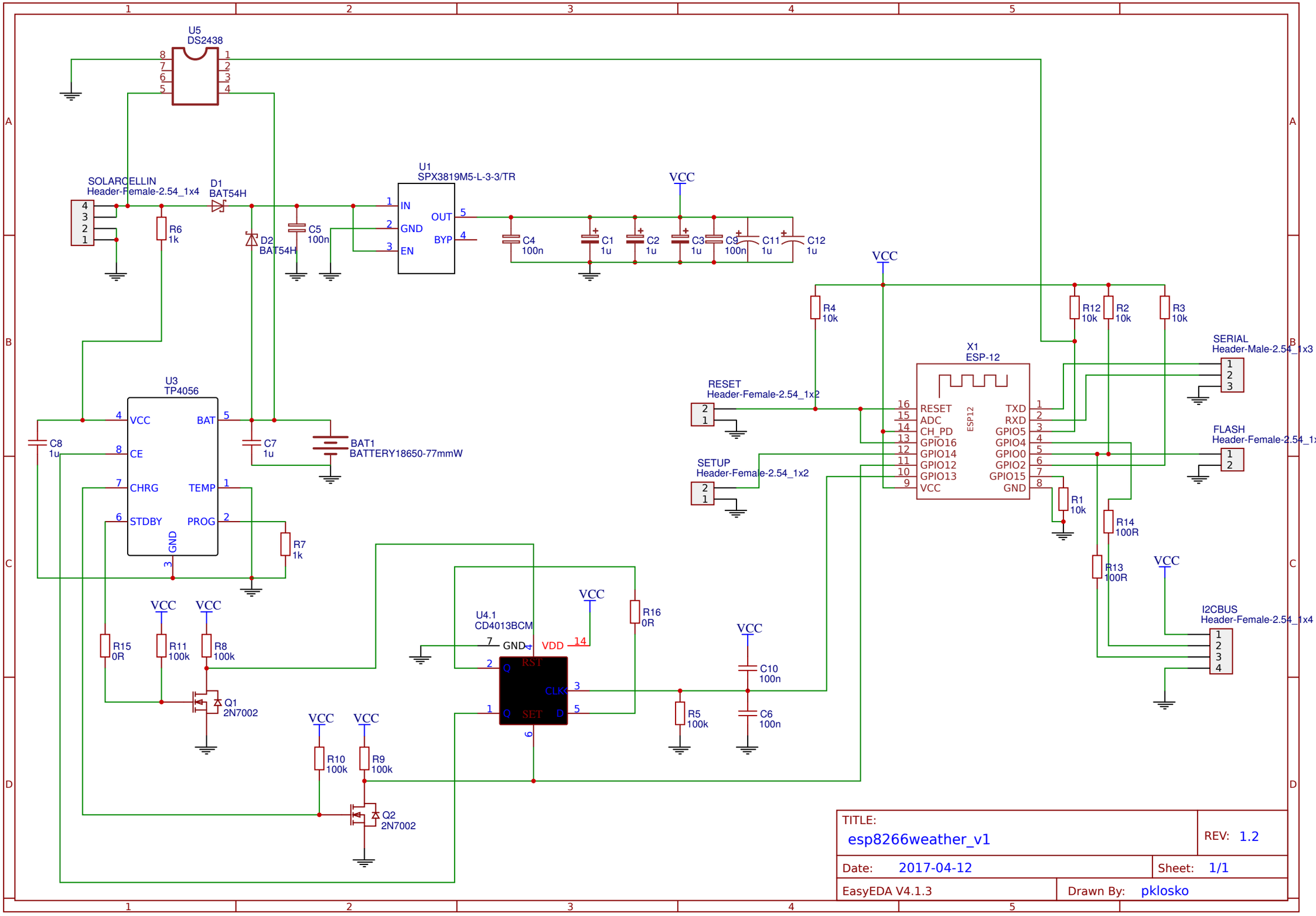
U5
DS2438
SOLARCELLIN
Header-Female-2.54_1x4
D1
BAT54H
R6
1k
D2
BAT54H
C5
100n
U1
SPX3819M5-L-3-3/TR
IN
GND
EN
OUT
BYP
C4
100n
C1
1u
C2
1u
C3
1u
C9
100n
C11
1u
C12
1u
VCC
R4
10k
R12
10k
R2
10k
R3
10k
X1
ESP-12
RESET
ADC
CH_PD
GPIO16
GPIO14
GPIO12
GPIO13
VCC
TXD
RXD
GPIO5
GPIO4
GPIO0
GPIO2
GPIO15
GND
ESP12
SERIAL
Header-Male-2.54_1x3
FLASH
Header-Female-2.54_1x2
RESET
Header-Female-2.54_1x2
SETUP
Header-Female-2.54_1x2
R1
10k
R14
100R
R13
100R
I2CBUS
Header-Female-2.54_1x4
U3
TP4056
VCC
CE
CHRG
STDBY
BAT
TEMP
PROG
GND
C8
1u
C7
1u
BAT1
BATTERY18650-77mmW
R7
1k
R15
0R
R11
100k
R8
100k
Q1
2N7002
U4.1
CD4013BCM
GND
VDD
RST
Q
CLK
SET
D
R16
0R
R5
100k
C10
100n
C6
100n
R10
100k
R9
100k
Q2
2N7002
TITLE:
esp8266weather_v1
REV: 1.2
Date: 2017-04-12
Sheet: 1/1
EasyEDA V4.1.3
Drawn By: pklosko