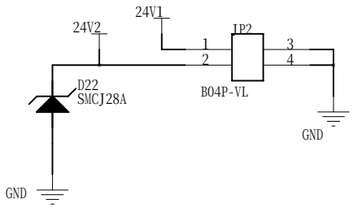

电源输入

24V1 用于背包气阀

24V2 用于梭子气阀及步进电机

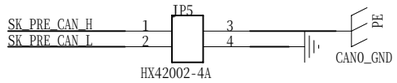

输入CAN 总线

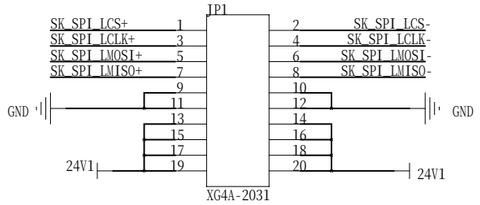

气阀左

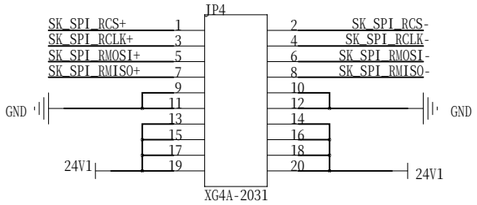

气阀右

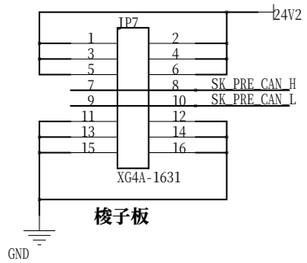

梭子板

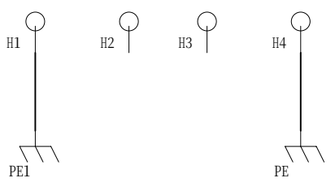

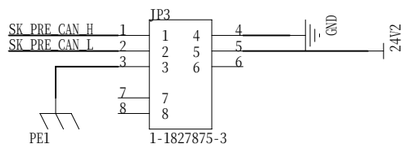

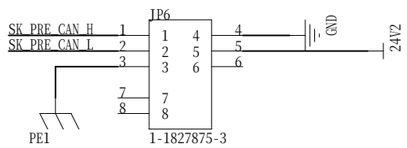

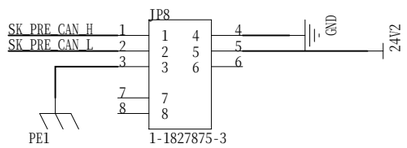

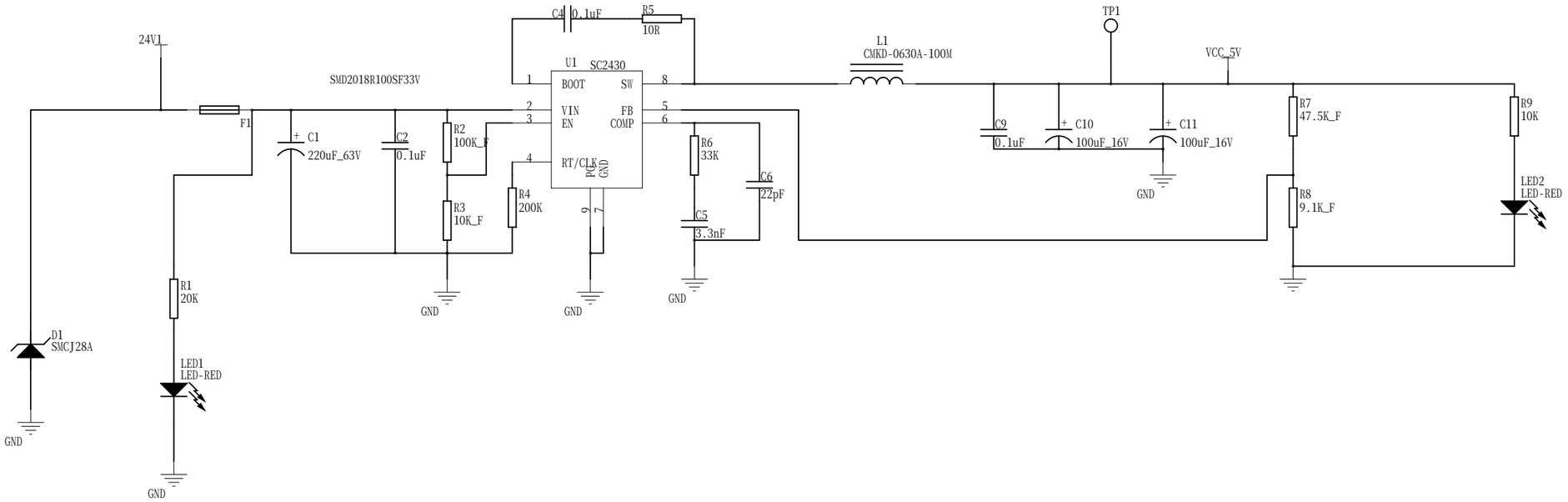
24V1
F1
SMD2018R100SF33V
C1
220uF_63V
C2
0.1uF
R2
100K_F
R3
10K_F
R4
200K
C4
0.1uF
R5
10R
U1
SC2430
BOOT
VIN
EN
RT/CLK
SW
FB
COMP
PGND
GND
R6
33K
C5
3.3nF
C6
22pF
L1
CMKD-0630A-100M
TP1
VCC_5V
C9
0.1uF
C10
100uF_16V
C11
100uF_16V
R7
47.5K_F
R8
9.1K_F
R9
10K
LED2
LED-RED
R1
20K
LED1
LED-RED
D1
SMCJ28A
GND

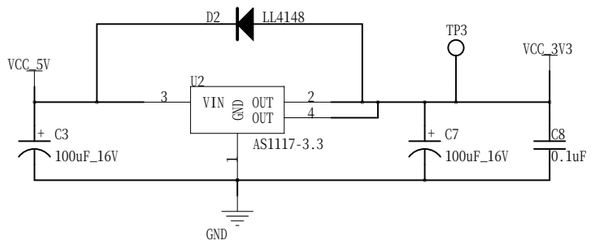
D2
LL4148
VCC_5V
U2
VIN
GND
OUT
OUT
AS1117-3.3
C3
100uF_16V
TP3
VCC_3V3
C7
100uF_16V
C8
0.1uF
GND

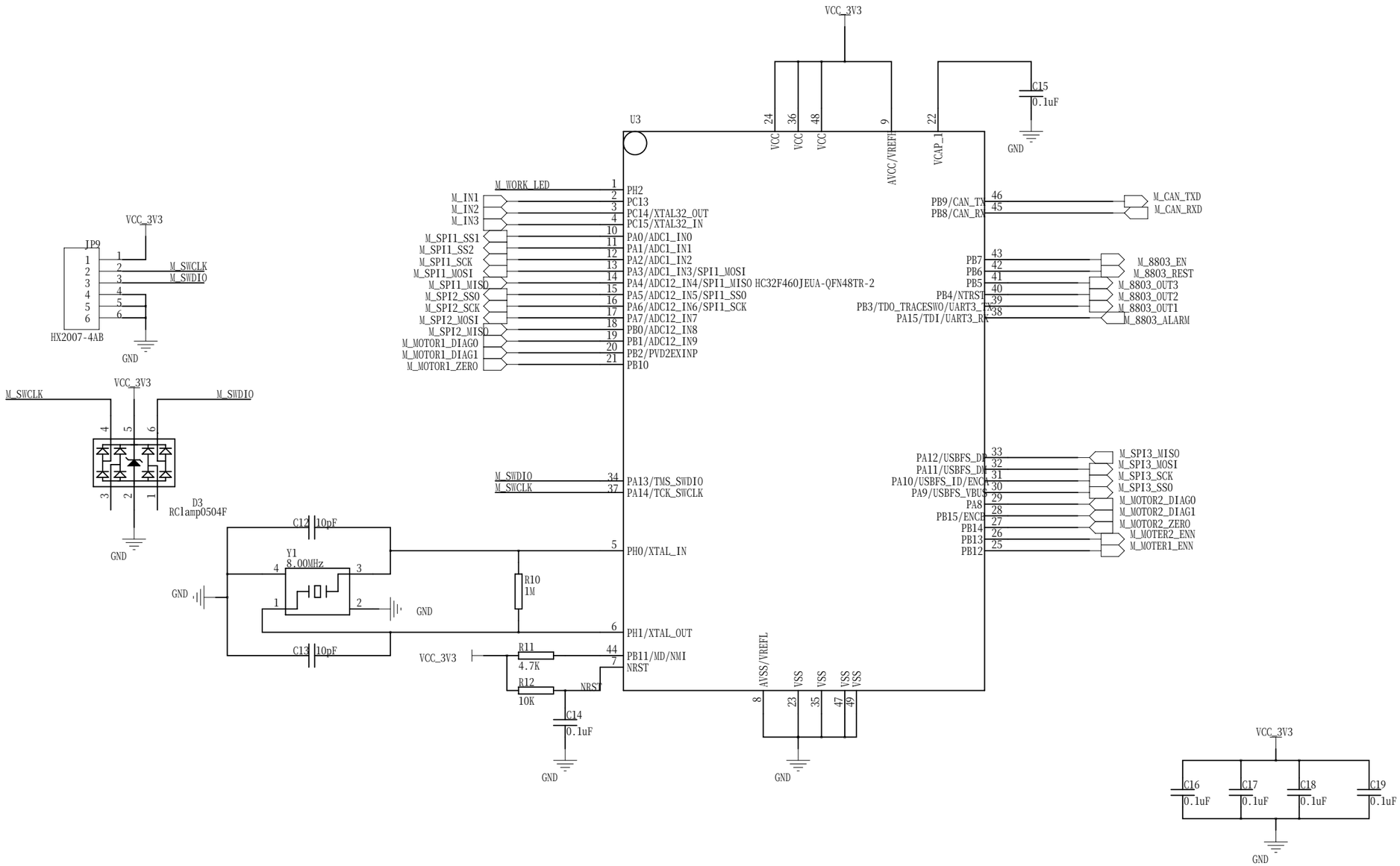
VCC_3V3
U3
C15
0.1uF
GND
VCC
VCC
VCC
AVCC/VREFL
VCAP_1
M_WORK_LED
M_IN1
M_IN2
M_IN3
M_SPI1_SS1
M_SPI1_SS2
M_SPI1_SCK
M_SPI1_MOSI
M_SPI1_MISO
M_SPI2_SS0
M_SPI2_SCK
M_SPI2_MOSI
M_SPI2_MISO
M_MOTOR1_DIAG0
M_MOTOR1_DIAG1
M_MOTOR1_ZERO
PH2
PC13
PC14/XTAL32_OUT
PC15/XTAL32_IN
PA0/ADC1_IN0
PA1/ADC1_IN1
PA2/ADC1_IN2
PA3/ADC1_IN3/SPI1_MOSI
PA4/ADC12_IN4/SPI1_MISO HC32F460JEUA-QFN48TR-2
PA5/ADC12_IN5/SPI1_SS0
PA6/ADC12_IN6/SPI1_SCK
PA7/ADC12_IN7
PB0/ADC12_IN8
PB1/ADC12_IN9
PB2/PVD2EXINP
PB10
PB9/CAN_TX
PB8/CAN_RX
M_CAN_TXD
M_CAN_RXD
PB7
PB6
PB5
PB4/NTRST
PB3/TDO_TRACESWO/UART3_TX
PA15/TDI/UART3_RX
M_8803_EN
M_8803_REST
M_8803_OUT3
M_8803_OUT2
M_8803_OUT1
M_8803_ALARM
M_SWDIO
M_SWCLK
PA13/TMS_SWDIO
PA14/TCK_SWCLK
PA12/USBFS_DP
PA11/USBFS_DM
PA10/USBFS_ID/ENCA
PA9/USBFS_VBUS
PA8
PB15/ENCB
PB14
PB13
PB12
M_SPI3_MISO
M_SPI3_MOSI
M_SPI3_SCK
M_SPI3_SS0
M_MOTOR2_DIAG0
M_MOTOR2_DIAG1
M_MOTOR2_ZERO
M_MOTER2_ENN
M_MOTER1_ENN
PH0/XTAL_IN
PH1/XTAL_OUT
PB11/MD/NMI
NRST
AVSS/VREFL
VSS
VSS
VSS
VSS
JP9
HX2007-4AB
M_SWCLK
M_SWDIO
D3
RClamp0504F
C12
10pF
C13
10pF
Y1
8.00MHz
R10
1M
R11
4.7K
R12
10K
C14
0.1uF
R13
10K
LED3
LED-RED
C16
0.1uF
C17
0.1uF
C18
0.1uF
C19
0.1uF

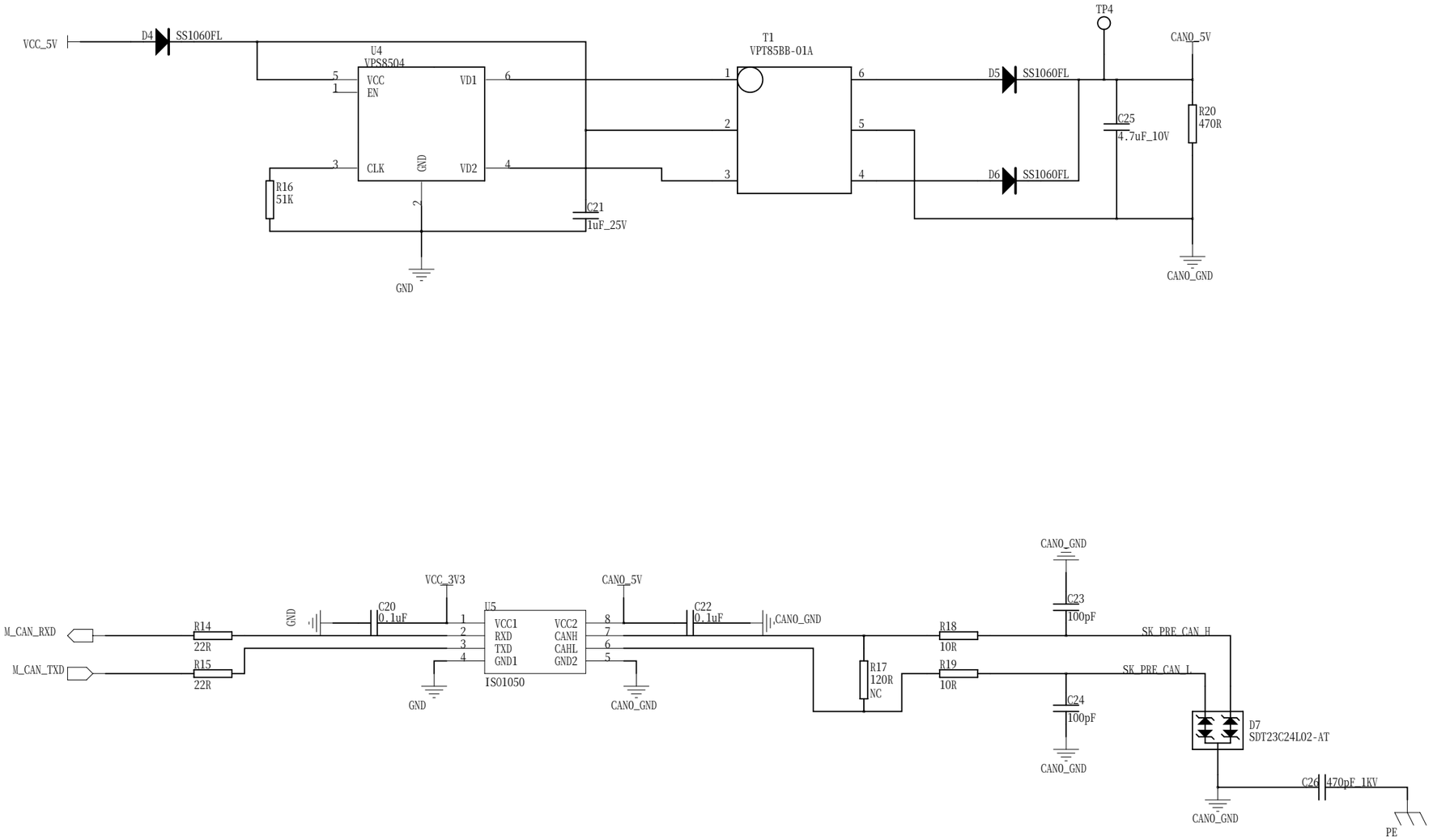
VCC_5V
D4
SS1060FL
U4
VPS8504
VCC
EN
VD1
CLK
GND
VD2
R16
51K
C21
1uF_25V
GND
T1
VPT85BB-01A
TP4
D5
SS1060FL
D6
SS1060FL
C25
4.7uF_10V
R20
470R
CAN0_5V
CAN0_GND
M_CAN_RXD
M_CAN_TXD
R14
22R
R15
22R
C20
0.1uF
VCC_3V3
U5
VCC1
RXD
TXD
GND1
VCC2
CANH
CAHL
GND2
ISO1050
CAN0_5V
C22
0.1uF
CAN0_GND
R17
120R
NC
R18
10R
R19
10R
C23
100pF
C24
100pF
SK_PRE_CAN_H
SK_PRE_CAN_L
D7
SDT23C24L02-AT
C26
470pF_1KV
PE

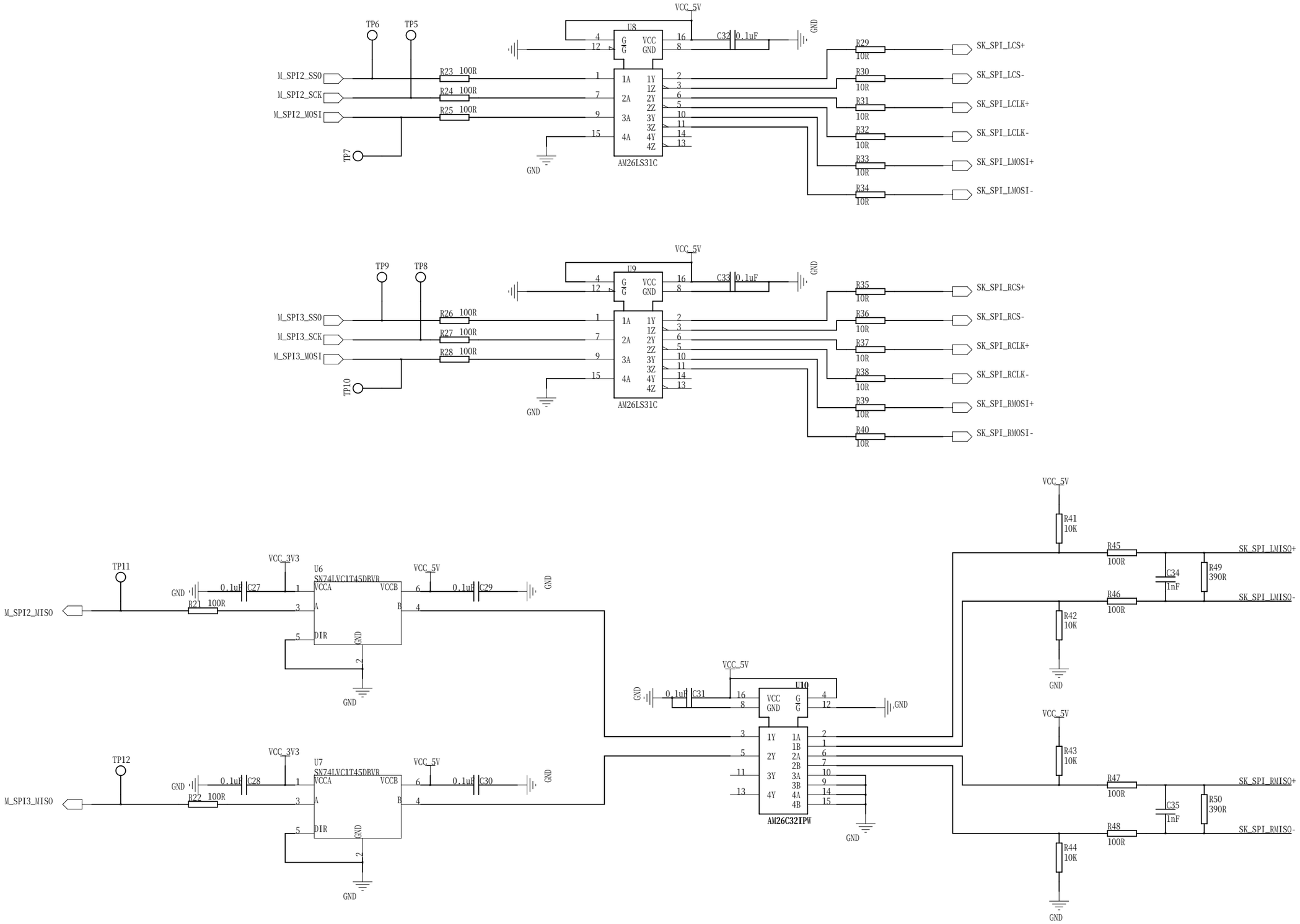
VCC_5V
U8
TP6
TP5
M_SPI2_SS0
M_SPI2_SCK
M_SPI2_MOSI
TP7
R23 100R
R24 100R
R25 100R
C32 0.1uF
GND
AM26LS31C
R29 10R
R30 10R
R31 10R
R32 10R
R33 10R
R34 10R
SK_SPI_LCS+
SK_SPI_LCS-
SK_SPI_LCLK+
SK_SPI_LCLK-
SK_SPI_LMOSI+
SK_SPI_LMOSI-
U9
TP9
TP8
M_SPI3_SS0
M_SPI3_SCK
M_SPI3_MOSI
TP10
R26 100R
R27 100R
R28 100R
C33 0.1uF
R35 10R
R36 10R
R37 10R
R38 10R
R39 10R
R40 10R
SK_SPI_RCS+
SK_SPI_RCS-
SK_SPI_RCLK+
SK_SPI_RCLK-
SK_SPI_RMOSI+
SK_SPI_RMOSI-
VCC_3V3
U6
SN74LVC1T45DBVR
TP11
M_SPI2_MISO
R21 100R
C27 0.1uF
C29 0.1uF
U7
TP12
M_SPI3_MISO
R22 100R
C28 0.1uF
C30 0.1uF
U10
AM26C32IPW
C31 0.1uF
R41 10K
R42 10K
R43 10K
R44 10K
R45 100R
R46 100R
R47 100R
R48 100R
C34 1nF
C35 1nF
R49 390R
R50 390R
SK_SPI_LMISO+
SK_SPI_LMISO-
SK_SPI_RMISO+
SK_SPI_RMISO-

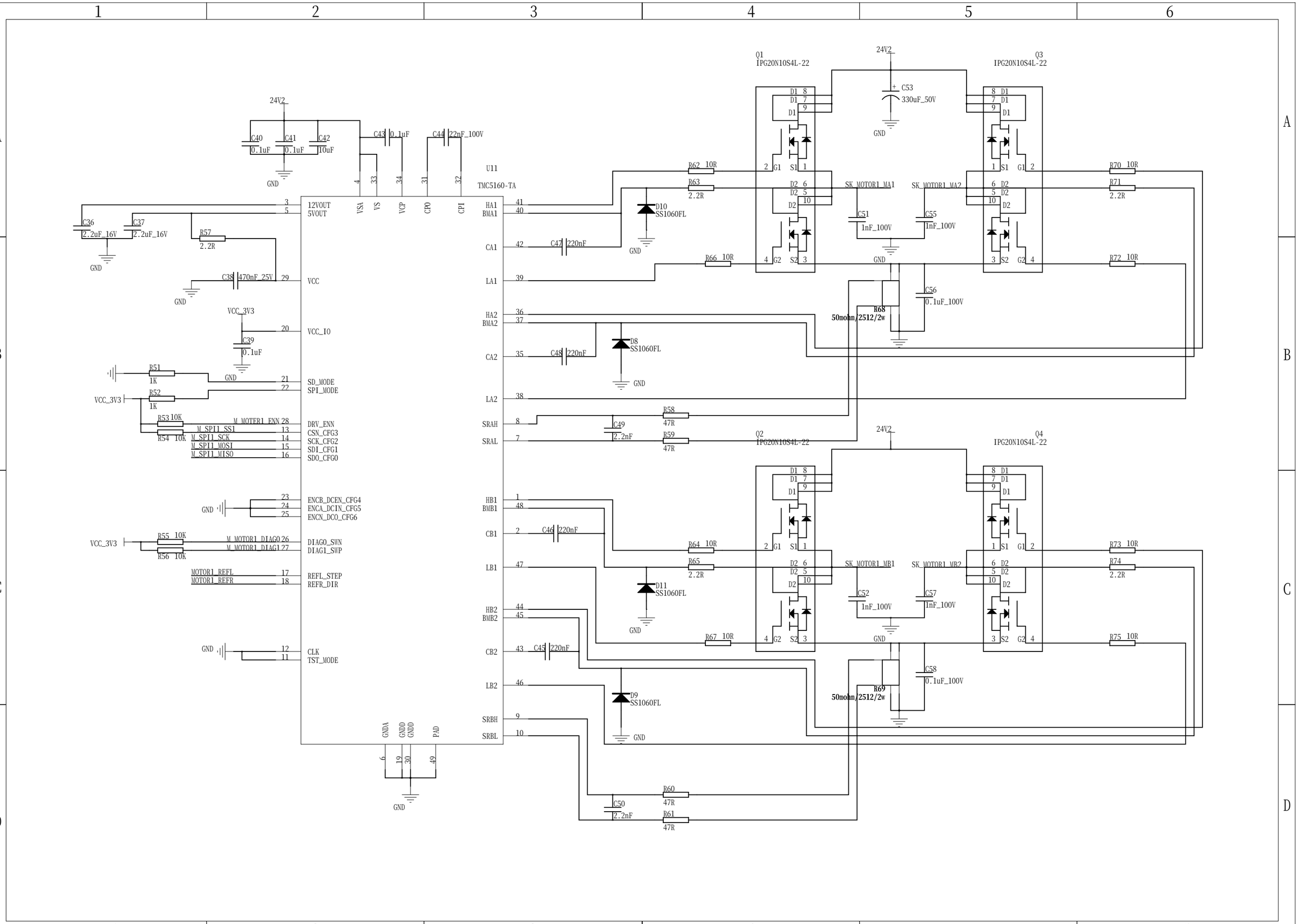
U11
TMC5160-TA
Q1
IPG20N10S4L-22
Q2
IPG20N10S4L-22
Q3
IPG20N10S4L-22
Q4
IPG20N10S4L-22
24V2
C53
330uF_50V
C40 0.1uF
C41 0.1uF
C42 10uF
C43 0.1uF
C44 22nF_100V
C36 2.2uF_16V
C37 2.2uF_16V
R57 2.2R
C38 470nF_25V
VCC_3V3
C39 0.1uF
R51 1K
R52 1K
R53 10K
R54 10K
R55 10K
R56 10K
M_MOTER1_ENN
M_SPI1_SS1
M_SPI1_SCK
M_SPI1_MOSI
M_SPI1_MISO
M_MOTOR1_DIAG0
M_MOTOR1_DIAG1
MOTOR1_REFL
MOTOR1_REFR
12VOUT
5VOUT
VSA
VS
VCP
CP0
CP1
VCC
VCC_IO
SD_MODE
SPI_MODE
DRV_ENN
CSN_CFG3
SCK_CFG2
SDI_CFG1
SDO_CFG0
ENCB_DCEN_CFG4
ENCA_DCIN_CFG5
ENCN_DCO_CFG6
DIAG0_SWN
DIAG1_SWP
REFL_STEP
REFR_DIR
CLK
TST_MODE
GNDA
GNDD
PAD
HA1
BMA1
CA1
LA1
HA2
BMA2
CA2
LA2
SRAH
SRAL
HB1
BMB1
CB1
LB1
HB2
BMB2
CB2
LB2
SRBH
SRBL
C47 220nF
C48 220nF
C46 220nF
C45 220nF
D10 SS1060FL
D8 SS1060FL
D11 SS1060FL
D9 SS1060FL
R62 10R
R63 2.2R
R66 10R
R64 10R
R65 2.2R
R67 10R
R70 10R
R71 2.2R
R72 10R
R73 10R
R74 2.2R
R75 10R
SK_MOTOR1_MA1
SK_MOTOR1_MA2
SK_MOTOR1_MB1
SK_MOTOR1_MB2
C51 1nF_100V
C55 1nF_100V
C52 1nF_100V
C57 1nF_100V
C56 0.1uF_100V
C58 0.1uF_100V
R68 50mohm/2512/2w
R69 50mohm/2512/2w
R58 47R
R59 47R
R60 47R
R61 47R
C49 2.2nF
C50 2.2nF
GND

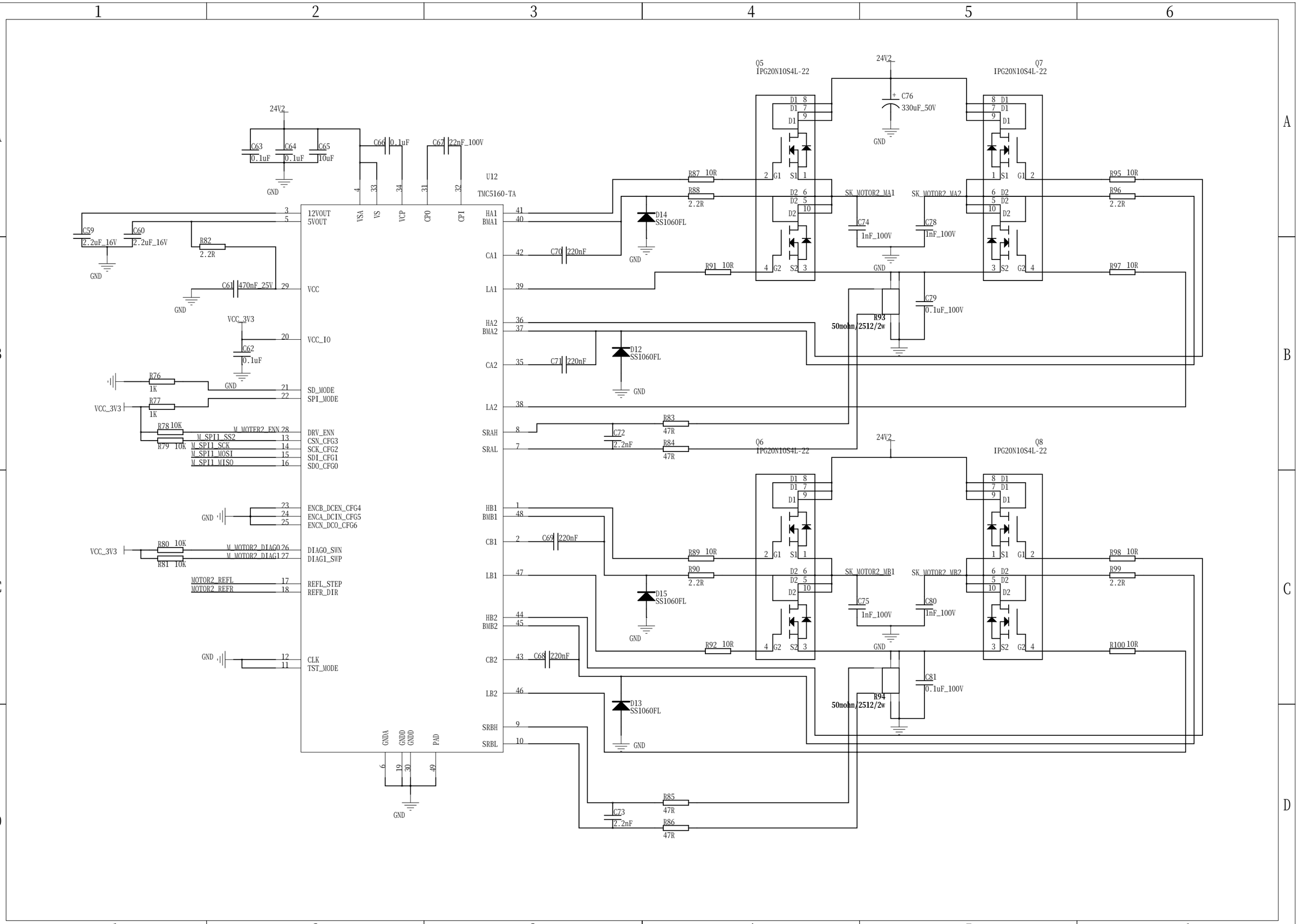
U12
TMC5160-TA
24V2
C63 0.1uF
C64 0.1uF
C65 10uF
C66 0.1uF
C67 22nF_100V
GND
12VOUT
5VOUT
VSA
VS
VCP
CP0
CP1
HA1
BMA1
CA1
LA1
HA2
BMA2
CA2
LA2
SRAH
SRAL
HB1
BMB1
CB1
LB1
HB2
BMB2
CB2
LB2
SRBH
SRBL
VCC
VCC_IO
SD_MODE
SPI_MODE
DRV_ENN
CSN_CFG3
SCK_CFG2
SDI_CFG1
SDO_CFG0
ENCB_DCEN_CFG4
ENCA_DCIN_CFG5
ENCN_DCO_CFG6
DIAG0_SWN
DIAG1_SWP
REFL_STEP
REFR_DIR
CLK
TST_MODE
GNDA
GNDD
PAD
C59 2.2uF_16V
C60 2.2uF_16V
R82 2.2R
C61 470nF_25V
VCC_3V3
C62 0.1uF
R76 1K
R77 1K
R78 10K
R79 10K
M_MOTER2_ENN
M_SPI1_SS2
M_SPI1_SCK
M_SPI1_MOSI
M_SPI1_MISO
R80 10K
R81 10K
M_MOTOR2_DIAG0
M_MOTOR2_DIAG1
MOTOR2_REFL
MOTOR2_REFR
C70 220nF
C71 220nF
C69 220nF
C68 220nF
D14 SS1060FL
D12 SS1060FL
D15 SS1060FL
D13 SS1060FL
R87 10R
R88 2.2R
R91 10R
R89 10R
R90 2.2R
R92 10R
R83 47R
R84 47R
R85 47R
R86 47R
C72 2.2nF
C73 2.2nF
Q5
IPG20N10S4L-22
Q6
IPG20N10S4L-22
Q7
IPG20N10S4L-22
Q8
IPG20N10S4L-22
C76 330uF_50V
SK_MOTOR2_MA1
SK_MOTOR2_MA2
SK_MOTOR2_MB1
SK_MOTOR2_MB2
C74 1nF_100V
C78 1nF_100V
C75 1nF_100V
C80 1nF_100V
C79 0.1uF_100V
C81 0.1uF_100V
R93 50mohm/2512/2w
R94 50mohm/2512/2w
R95 10R
R96 2.2R
R97 10R
R98 10R
R99 2.2R
R100 10R

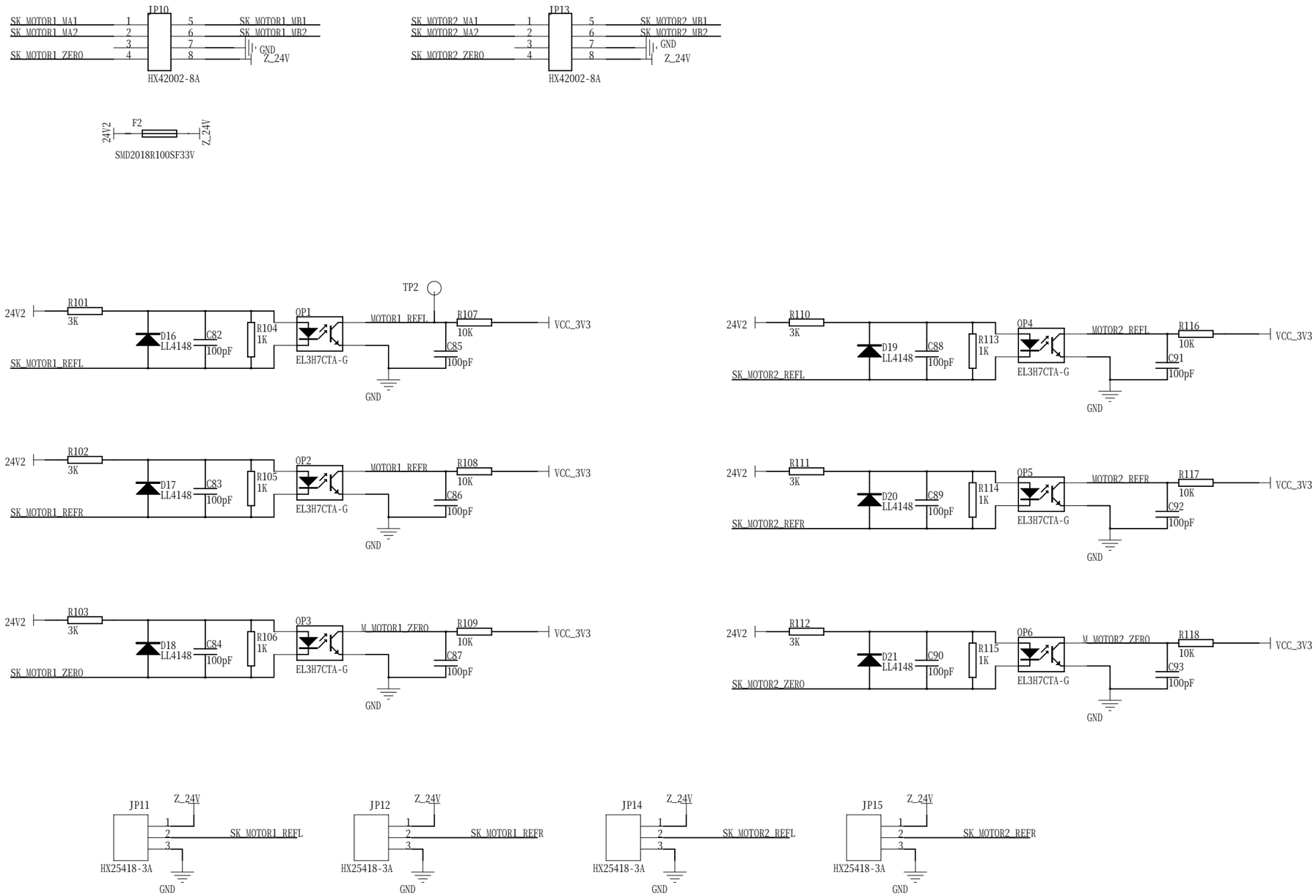
JP10
SK_MOTOR1_MA1
SK_MOTOR1_MA2
SK_MOTOR1_ZERO
SK_MOTOR1_MB1
SK_MOTOR1_MB2
GND
Z_24V
HX42002-8A
JP13
SK_MOTOR2_MA1
SK_MOTOR2_MA2
SK_MOTOR2_ZERO
SK_MOTOR2_MB1
SK_MOTOR2_MB2
GND
Z_24V
HX42002-8A
24V2
F2
Z_24V
SMD2018R100SF33V
TP2
24V2
R101
3K
D16
LL4148
C82
100pF
R104
1K
OP1
EL3H7CTA-G
SK_MOTOR1_REFL
MOTOR1_REFL
R107
10K
C85
100pF
VCC_3V3
GND
24V2
R102
3K
D17
LL4148
C83
100pF
R105
1K
OP2
EL3H7CTA-G
SK_MOTOR1_REFR
MOTOR1_REFR
R108
10K
C86
100pF
VCC_3V3
GND
24V2
R103
3K
D18
LL4148
C84
100pF
R106
1K
OP3
EL3H7CTA-G
SK_MOTOR1_ZERO
M_MOTOR1_ZERO
R109
10K
C87
100pF
VCC_3V3
GND
24V2
R110
3K
D19
LL4148
C88
100pF
R113
1K
OP4
EL3H7CTA-G
SK_MOTOR2_REFL
MOTOR2_REFL
R116
10K
C91
100pF
VCC_3V3
GND
24V2
R111
3K
D20
LL4148
C89
100pF
R114
1K
OP5
EL3H7CTA-G
SK_MOTOR2_REFR
MOTOR2_REFR
R117
10K
C92
100pF
VCC_3V3
GND
24V2
R112
3K
D21
LL4148
C90
100pF
R115
1K
OP6
EL3H7CTA-G
SK_MOTOR2_ZERO
M_MOTOR2_ZERO
R118
10K
C93
100pF
VCC_3V3
GND
JP11
Z_24V
SK_MOTOR1_REFL
HX25418-3A
GND
JP12
Z_24V
SK_MOTOR1_REFR
HX25418-3A
GND
JP14
Z_24V
SK_MOTOR2_REFL
HX25418-3A
GND
JP15
Z_24V
SK_MOTOR2_REFR
HX25418-3A
GND

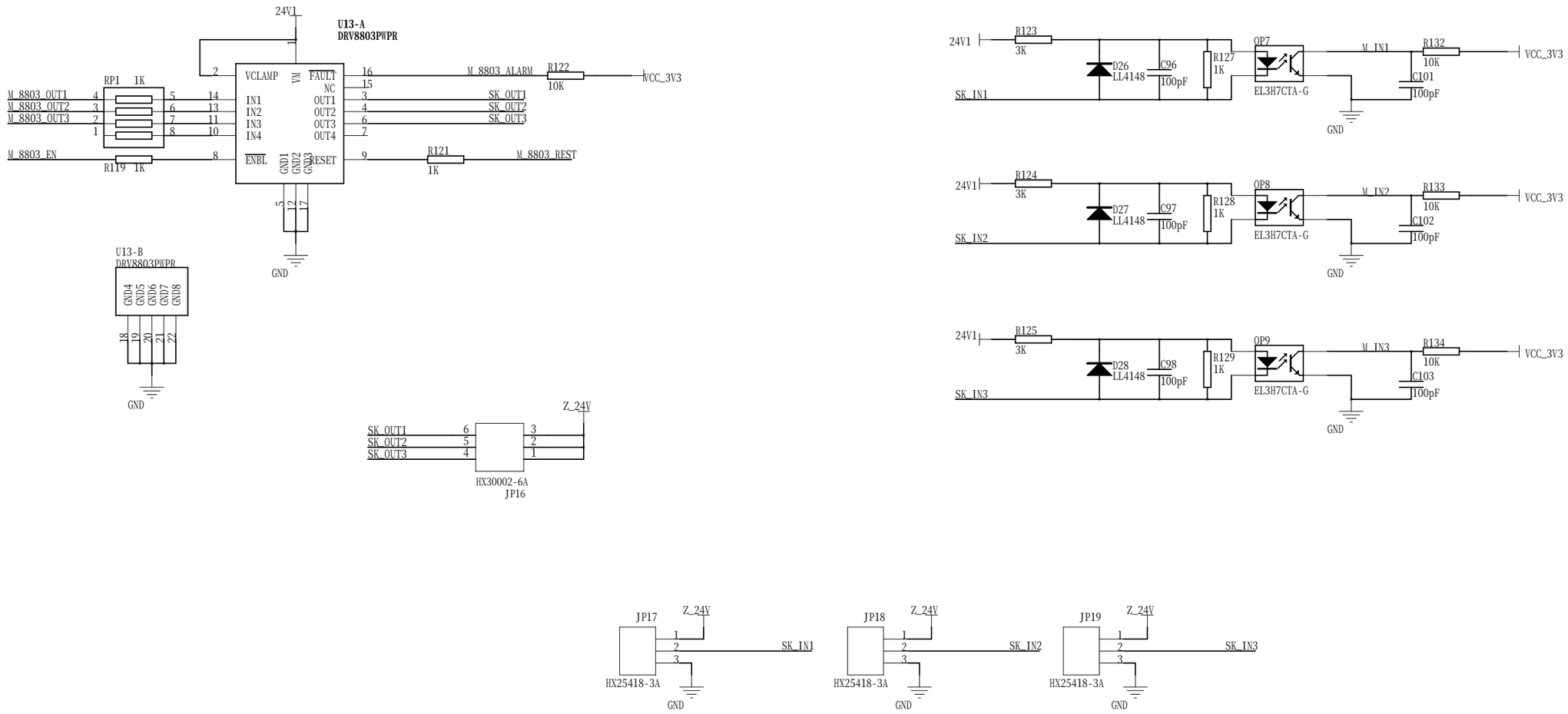
24V1
U13-A
DRV8803PWPR
VCLAMP
VM
FAULT
NC
IN1
IN2
IN3
IN4
OUT1
OUT2
OUT3
OUT4
ENBL
GND1
GND2
GND3
RESET
M_8803_ALARM
R122
10K
VCC_3V3
RP1 1K
M_8803_OUT1
M_8803_OUT2
M_8803_OUT3
SK_OUT1
SK_OUT2
SK_OUT3
M_8803_EN
R119 1K
R121
1K
M_8803_REST
GND
U13-B
DRV8803PWPR
GND4
GND5
GND6
GND7
GND8
GND
Z_24V
SK_OUT1
SK_OUT2
SK_OUT3
HX30002-6A
JP16
24V1
R123
3K
D26
LL4148
C96
100pF
R127
1K
OP7
EL3H7CTA-G
M_IN1
R132
10K
C101
100pF
VCC_3V3
SK_IN1
GND
24V1
R124
3K
D27
LL4148
C97
100pF
R128
1K
OP8
EL3H7CTA-G
M_IN2
R133
10K
C102
100pF
VCC_3V3
SK_IN2
GND
24V1
R125
3K
D28
LL4148
C98
100pF
R129
1K
OP9
EL3H7CTA-G
M_IN3
R134
10K
C103
100pF
VCC_3V3
SK_IN3
GND
JP17
Z_24V
SK_IN1
HX25418-3A
GND
JP18
Z_24V
SK_IN2
HX25418-3A
GND
JP19
Z_24V
SK_IN3
HX25418-3A
GND