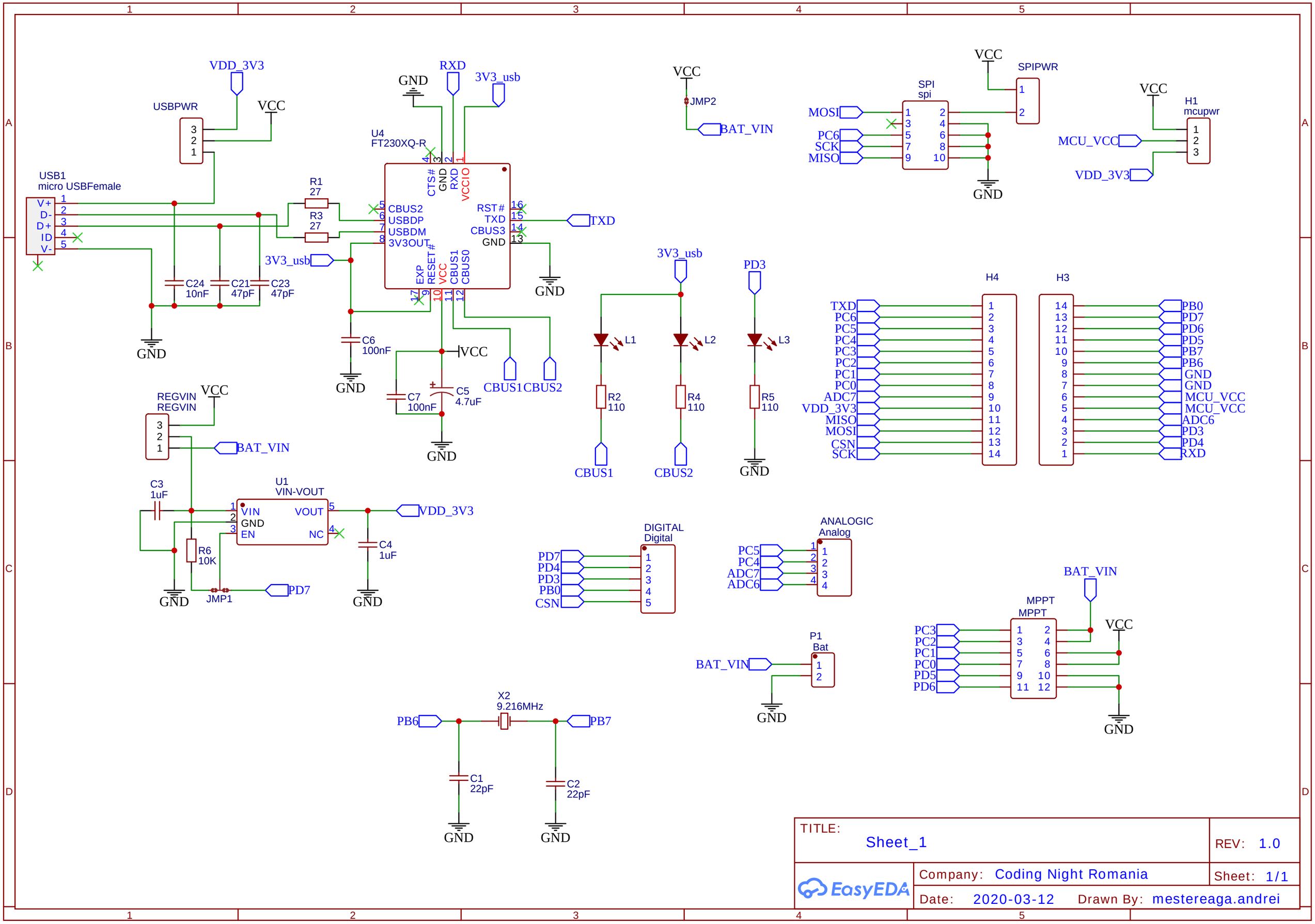

TITLE: Sheet_1	REV: 1.0
Company: Coding Night Romania	Sheet: 1/1
Date: 2020-03-12 Drawn By: mestereaga.andrei	