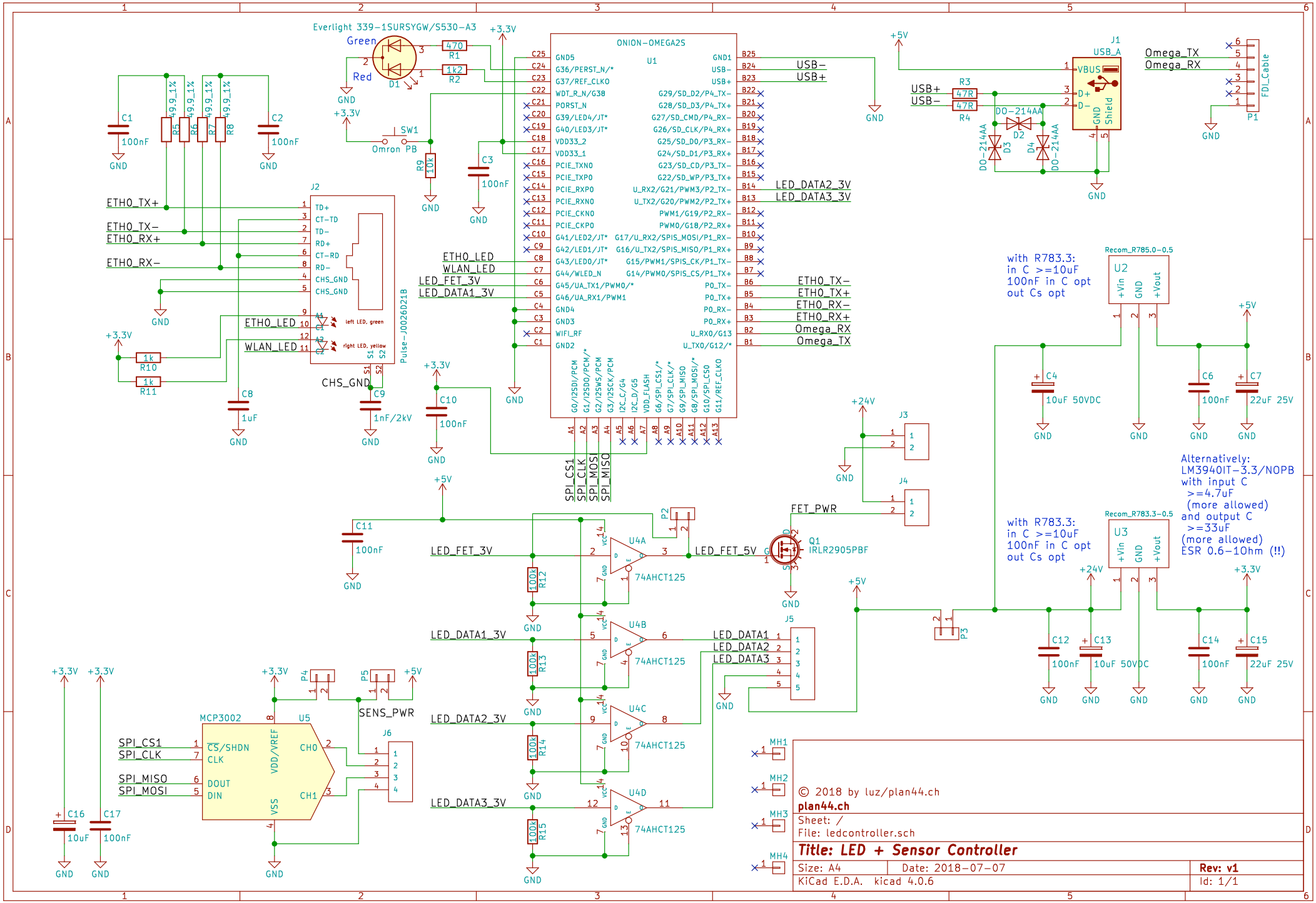
Everlight 339-1SURSYGW/S530-A3
Green
Red
D1
R1 470
R2 1k2
GND
+3.3V
SW1
Omron PB
R9 10k
C3 100nF
C1 100nF
C2 100nF
R5 49.9_1%
R6 49.9_1%
R7 49.9_1%
R8 49.9_1%
ONION-OMEGA2S
U1
J2
Pulse-J0026D21B
ETH0_TX+
ETH0_TX-
ETH0_RX+
ETH0_RX-
ETH0_LED
WLAN_LED
LED_FET_3V
LED_DATA1_3V
CHS_GND
left LED, green
right LED, yellow
R10 1k
R11 1k
C8 1uF
C9 1nF/2kV
C10 100nF
USB-
USB+
LED_DATA2_3V
LED_DATA3_3V
ETH0_TX-
ETH0_TX+
ETH0_RX-
ETH0_RX+
Omega_RX
Omega_TX
J1
USB_A
VBUS
D+
D-
GND
Shield
R3 47R
R4 47R
D2 DO-214AA
D3 DO-214AA
D4 DO-214AA
P1
FDI_Cable
Omega_TX
Omega_RX
with R783.3:
in C >=10uF
100nF in C opt
out Cs opt
Recom_R785.0-0.5
U2
+Vin
GND
+Vout
C4 10uF 50VDC
C6 100nF
C7 22uF 25V
Alternatively:
LM3940IT-3.3/NOPB
with input C
>=4.7uF
(more allowed)
and output C
>=33uF
(more allowed)
ESR 0.6-10Ohm (!!)
Recom_R783.3-0.5
U3
C12 100nF
C13 10uF 50VDC
C14 100nF
C15 22uF 25V
J3
J4
FET_PWR
Q1
IRLR2905PBF
P2
P3
LED_FET_3V
LED_FET_5V
LED_DATA1_3V
LED_DATA2_3V
LED_DATA3_3V
U4A
U4B
U4C
U4D
74AHCT125
R12 100k
R13 100k
R14 100k
R15 100k
C11 100nF
J5
LED_DATA1
LED_DATA2
LED_DATA3
SPI_CS1
SPI_CLK
SPI_MOSI
SPI_MISO
MCP3002
U5
CS/SHDN
CLK
DOUT
DIN
VDD/VREF
VSS
CH0
CH1
P4
P5
SENS_PWR
J6
C16 10uF
C17 100nF
MH1
MH2
MH3
MH4
© 2018 by luz/plan44.ch
plan44.ch
Sheet: /
File: ledcontroller.sch
Title: LED + Sensor Controller
Size: A4
Date: 2018-07-07
Rev: v1
KiCad E.D.A. kicad 4.0.6
Id: 1/1