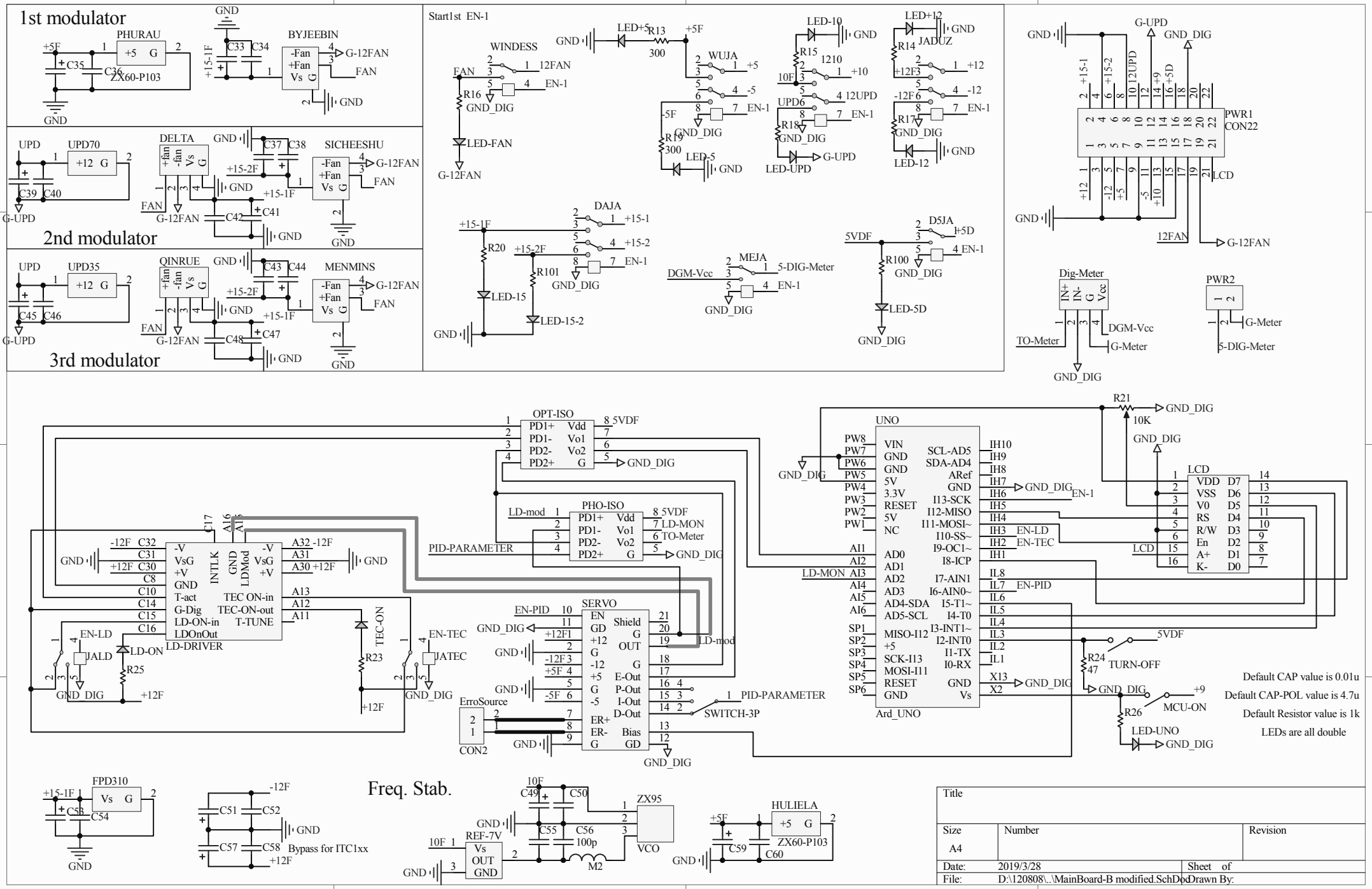
1st modulator
PHURAU
ZX60-P103
BYJEEBIN
G-12FAN
FAN
2nd modulator
UPD70
DELTA
SICHEESHU
3rd modulator
UPD35
QINRUE
MENMINS
Start1st EN-1
WINDESS
12FAN
EN-1
LED-FAN
WUJA
LED-10
JADUZ
LED-12
LED-UPD
G-UPD
DAJA
LED-15
LED-15-2
MEJA
5-DIG-Meter
DGM-Vcc
D5JA
LED-5D
PWR1
CON22
LCD
Dig-Meter
TO-Meter
G-Meter
PWR2
OPT-ISO
PHO-ISO
LD-mod
PID-PARAMETER
LD-MON
TO-Meter
SERVO
EN-PID
ErroSource
CON2
SWITCH-3P
UNO
Ard_UNO
LCD
R21
10K
TURN-OFF
MCU-ON
LED-UNO
LD-DRIVER
EN-LD
JALD
LD-ON
TEC-ON
EN-TEC
JATEC
Default CAP value is 0.01u
Default CAP-POL value is 4.7u
Default Resistor value is 1k
LEDs are all double
FPD310
Bypass for ITC1xx
Freq. Stab.
REF-7V
ZX95
VCO
HULIELA
ZX60-P103
Title
Size
A4
Number
Revision
Date: 2019/3/28
Sheet of
File: D:\120808\..\MainBoard-B modified.SchDoc
Drawn By: