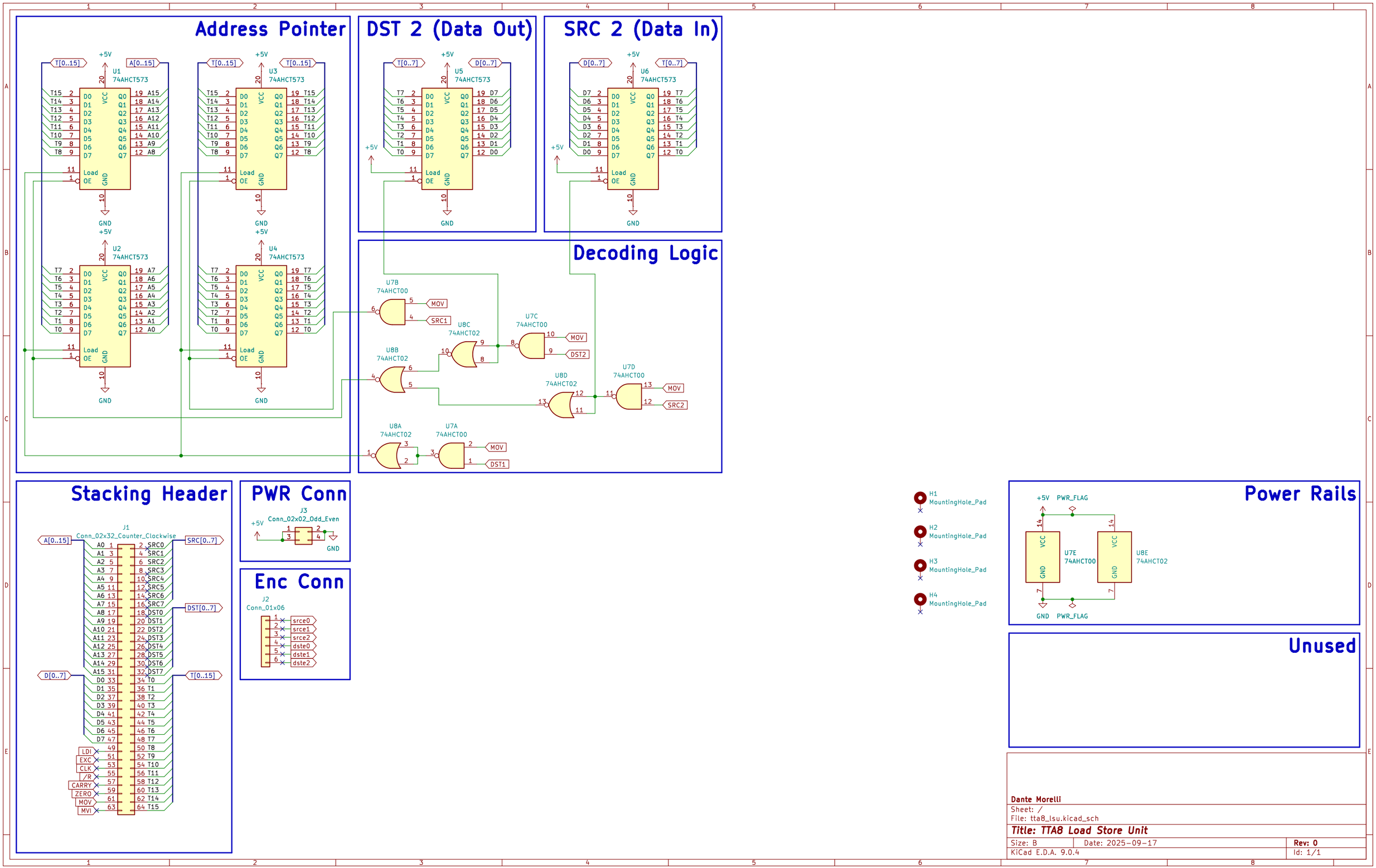

Dante Morelli

Sheet: /

File: tta8_lsu.kicad_sch

Title: TTA8 Load Store Unit

Size: B	Date: 2025-09-17	Rev: 0
KiCad E.D.A. 9.0.4		Id: 1/1