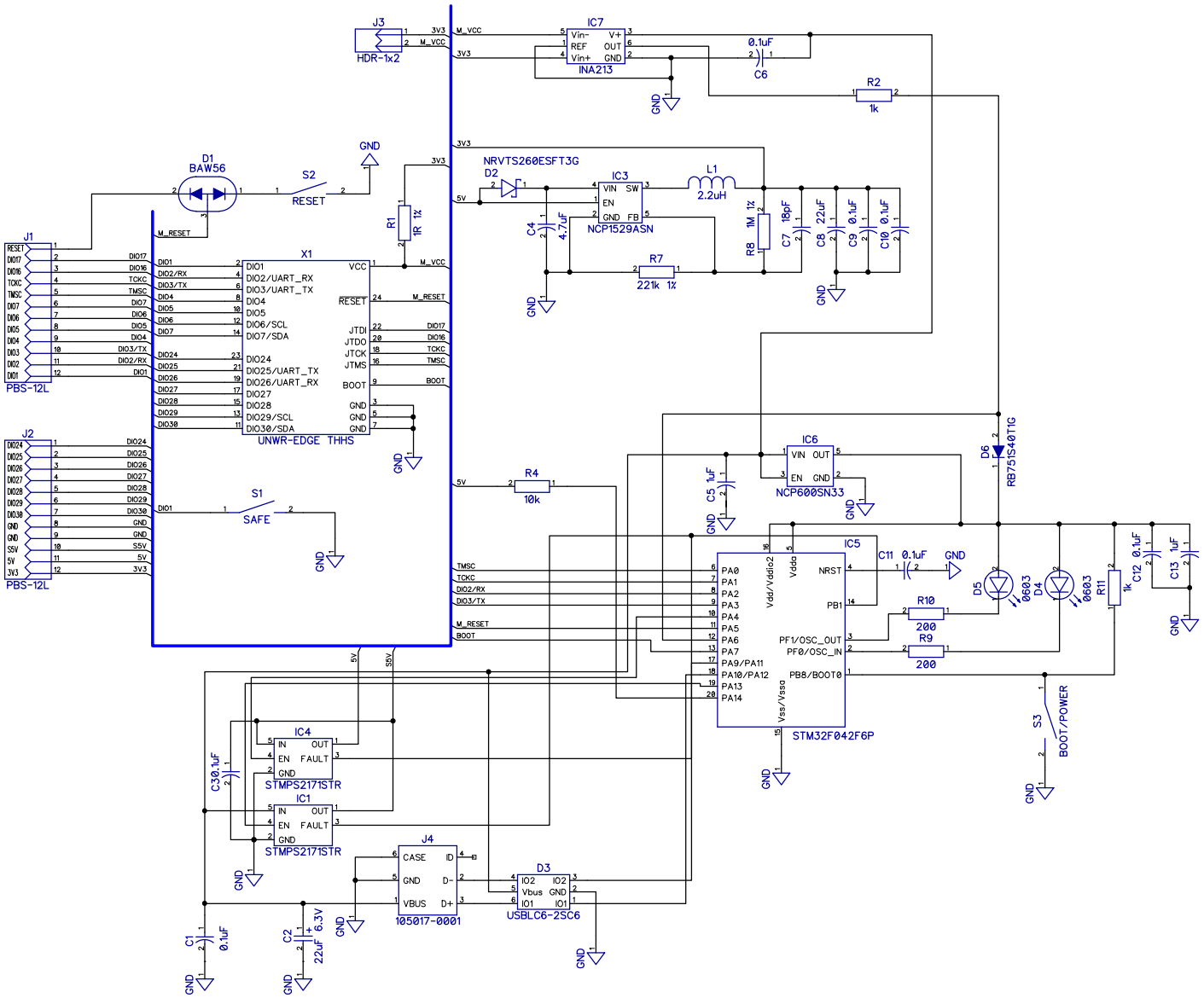

REVISIONS				
ZONE	REV	DESCRIPTION	DATE	APPROVED