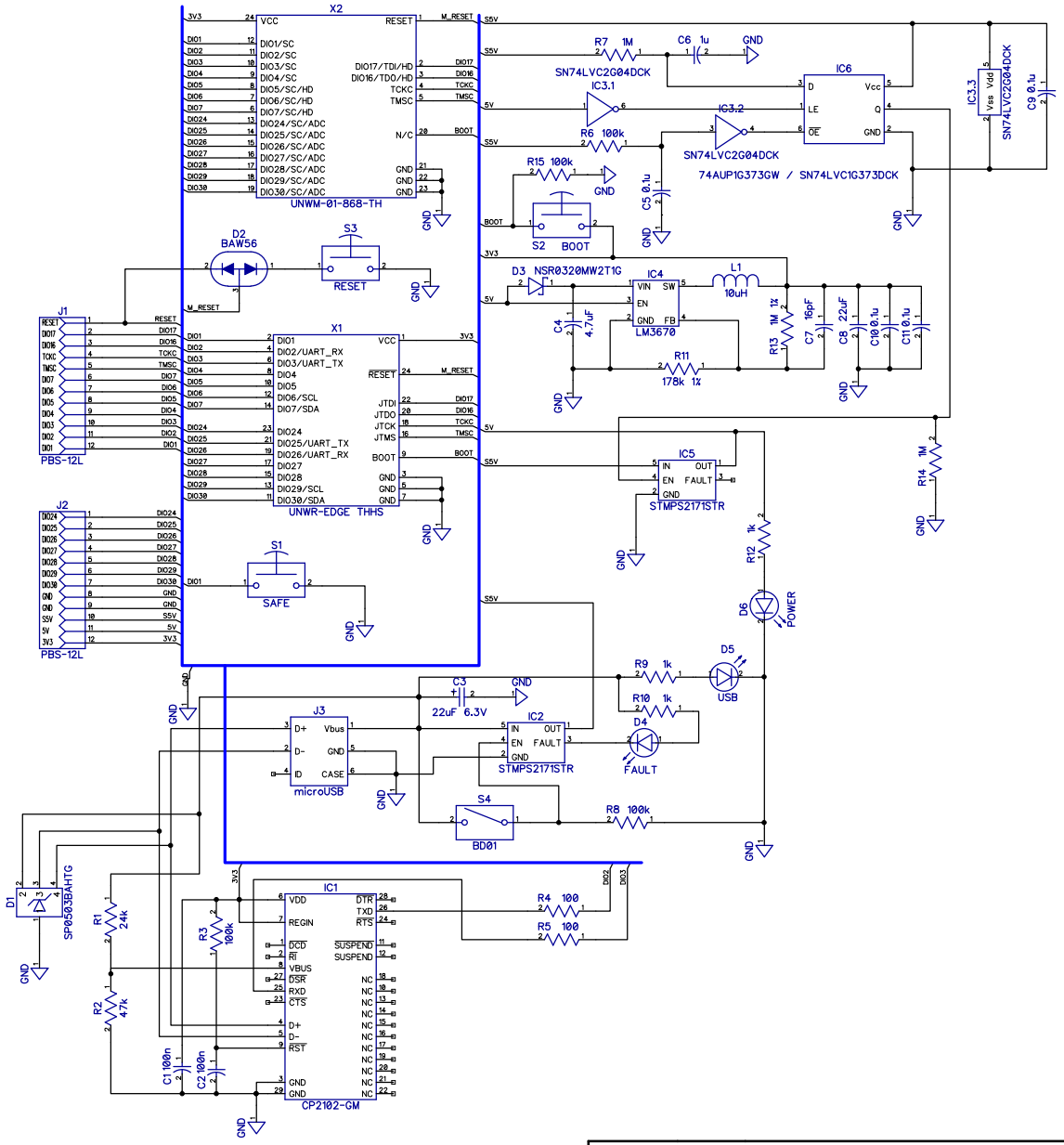

REVISIONS				
ZONE	REV	DESCRIPTION	DATE	APPROVED

umdk-rfu

Unwired Range and Unwired Mesh radio modems adapter with USB-UART