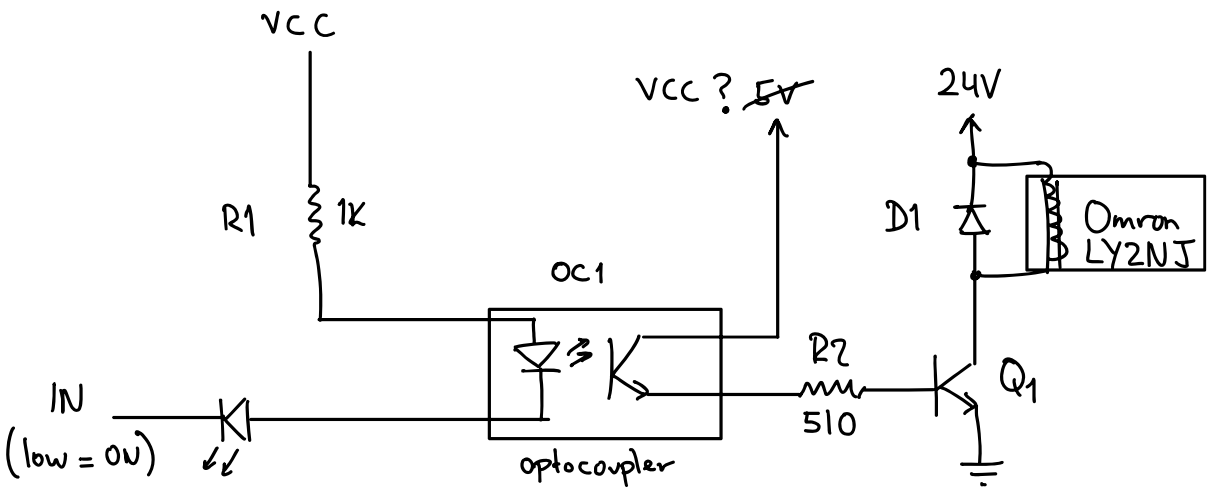

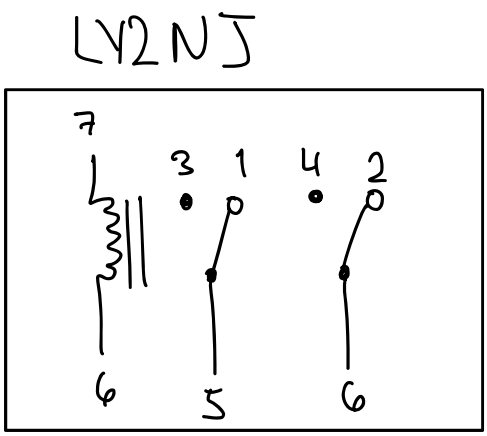

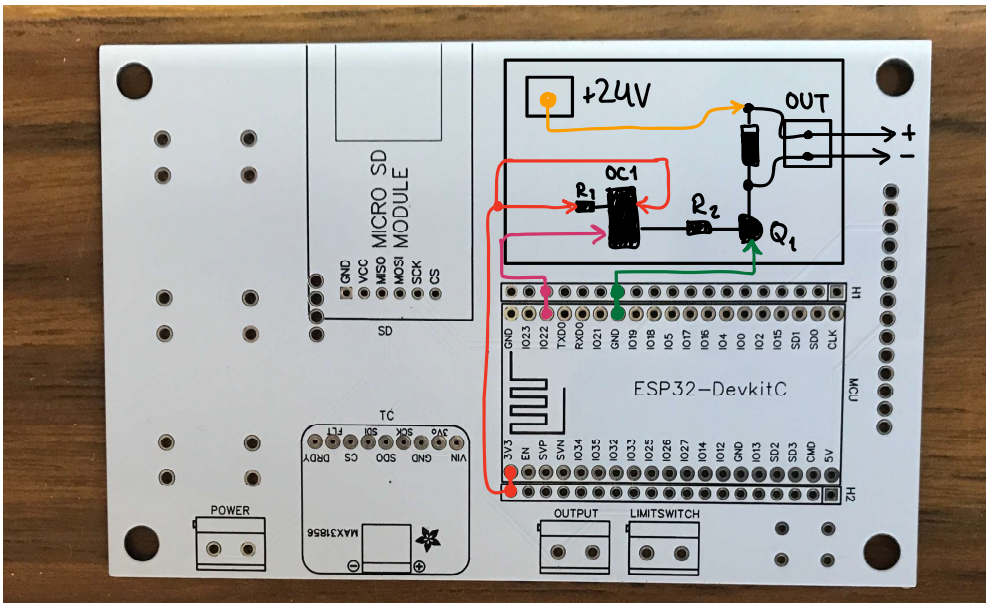

next board:

- incorporate trigger relay driver
- power via 24 or 12 VDC (integrate regulator)
- SMD smaller components
- Maybe Sunton instead of TFT