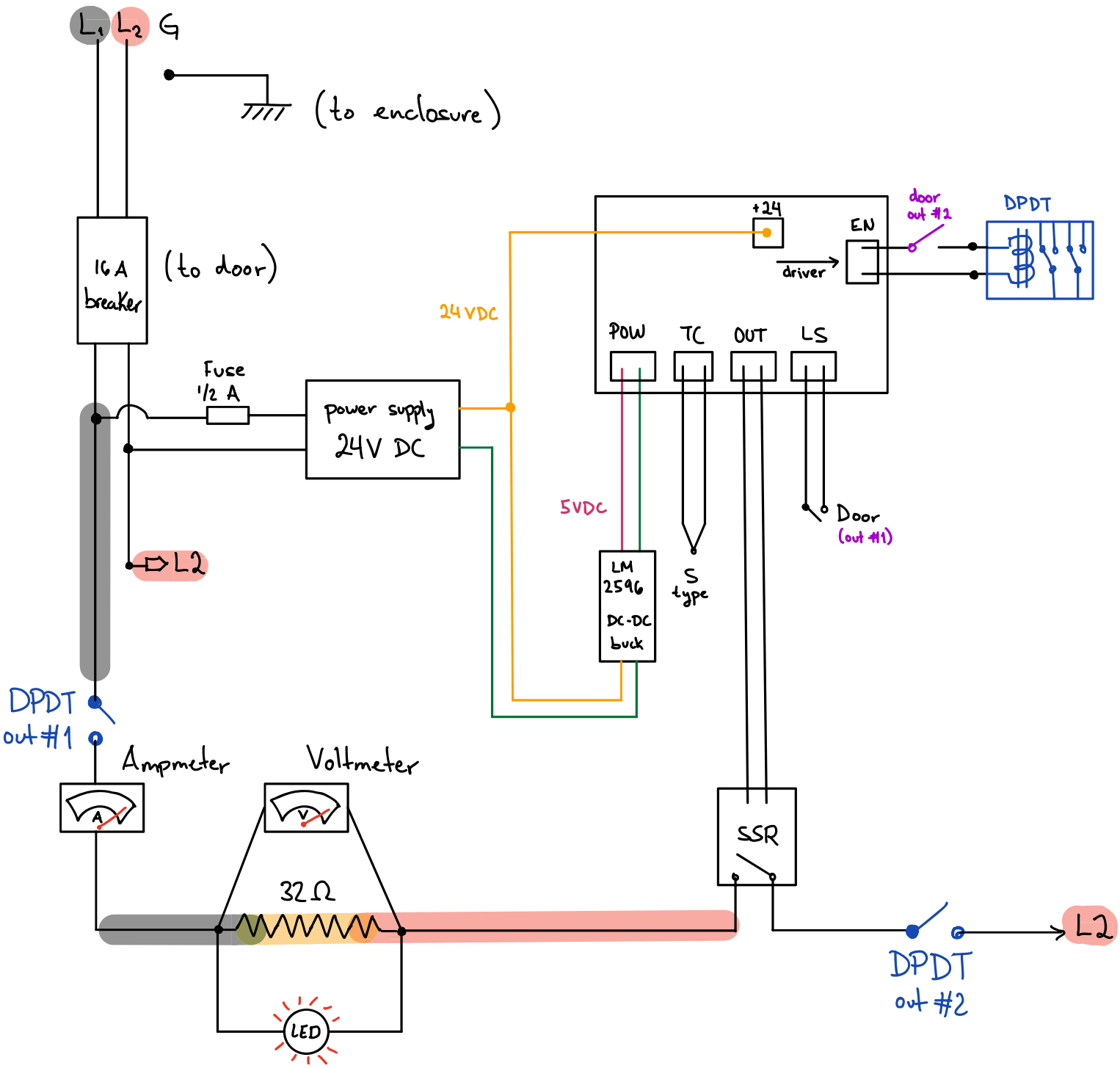
L1
L2
G
(to enclosure)
16 A breaker
(to door)
Fuse 1/2 A
power supply 24V DC
24 VDC
+24
EN
driver
door out #2
DPDT
POW
TC
OUT
LS
5VDC
LM 2596 DC-DC buck
S type
Door (out #1)
L2
DPDT out #1
Ampmeter
Voltmeter
A
V
32 Ω
LED
SSR
DPDT out #2
L2