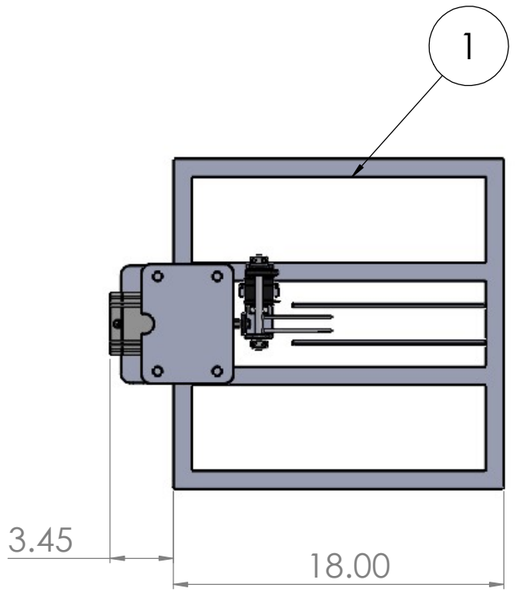

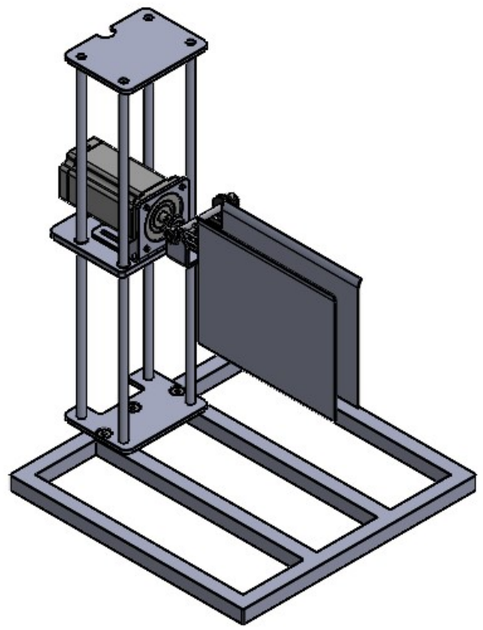

ITEM NO.	PART #	PART NAME	DESCRIPTION	QTY.
1	P001	MACHINE BASE	BASE FABRICATION OF MACHINE	1
2	P002	MACHINE SUPPORT	SUPPORT GUIDE RODS	1
3	P003	FLIPPER PLATE	FLIPPER PLATE FABRICATIONS	2
4	P004	ROLLER SHAFT BASE	BASE BRACKET - ROLLER SHAFT	1
5	P005	UPPER PRONG SHAFT	SHAFT INCLUDING BOTH UPPER PRONGS	1
6	P006-6338K415	OIL-EMBEDDED SLEEVE BEARINGS PN 6338K415	FLANGED SLEEVE BEARINGS FOR SUPPORT GUIDE RODS	4
7	P007	SERVO BRACKET	BRACKET TO HOLD SERVO MOTOR	1
8	P008/P009	GEAR SET	SET OF SPURS GEARS FOR PRONGS ASSEMBLY	1
9	P010-6436K13	CLAMPING TWO-PIECE COLLAR PN 6436K13	COLLAR FOR PRONGS UPPER SHAFT	2
10	P011-EK1935	DC MOTOR MOUNT AMAZON	STANDARD DC MOTOR MOUNT FOR NEMA34 FROM AMAZON	1
11	P012	LOWER PRONG SHAFT SUPPORT PIECE	SUPPORT PIECE FOR LOWER PRONGS SHAFT	1
12	P013-1329K103	PRECISION ACME FLANGE PN 1329K103	STANDARD ACME FLANGE FROM MCMASTER	1
13	P014-DS3245SG 270	ANNIMOS 45 KG HIGH-TORQUE SERVO	SERVO MOTOR FOR PRONG ASSEMBLY CONTROL	1
14	P015-34HS59-6204S	NEMA34 STEPPER MOTOR	NEMA 34 STEPPER MOTOR FROM ONLINE PURCHASE	1
15	P016	LOWER PRONG FABRICATION	LOWER PRONG FABRICATION SHAFT WITH PRONGS	1
16	P017	UPPER PRONG SHAFT BUSHING	BUSHING FOR UPPER PRONGS SHAFT	2

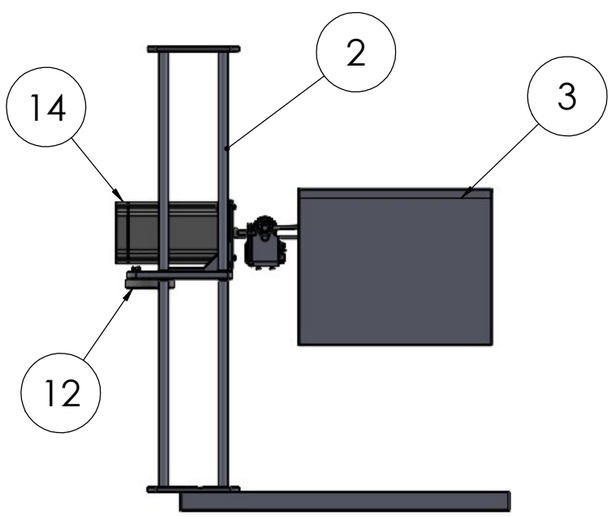

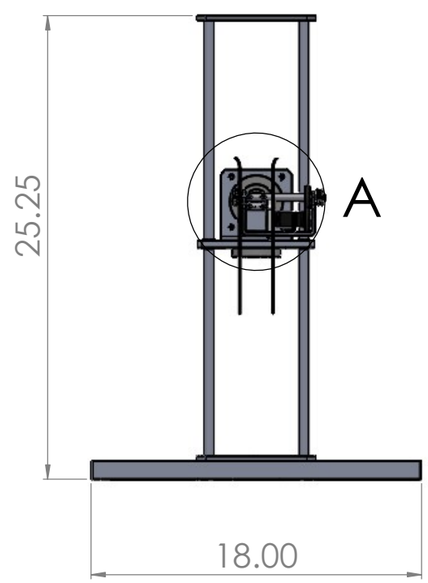

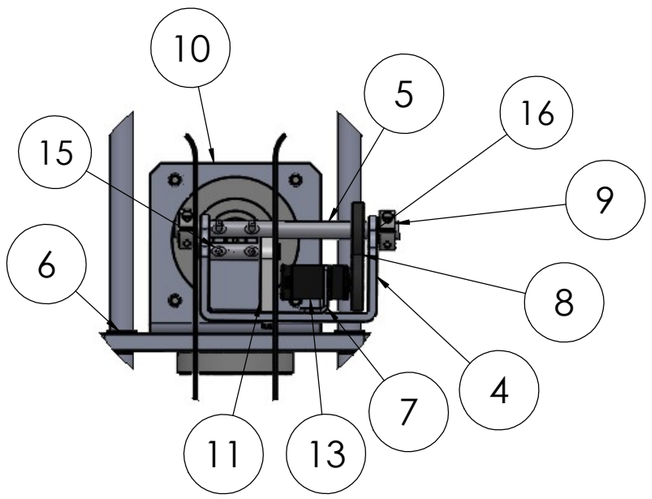

DETAIL A
SCALE 2 : 5

UNLESS OTHERWISE SPECIFIED:
DIMENSIONS ARE IN MILLIMETERS
SURFACE FINISH:
TOLERANCES:
LINEAR:
ANGULAR:

FINISH:

DEBURR AND BREAK SHARP EDGES

DO NOT SCALE DRAWING

REVISION

	NAME	SIGNATURE	DATE
DRAWN			
CHK'D			
APPV'D			
MFG			
Q.A			

MATERIAL: N/A

WEIGHT:

TITLE: Roller Design Assembly

DWG NO. DWG001

A2

SCALE:1:6

SHEET 1 OF 1

SOLIDWORKS Educational Product. For Instructional Use Only.