UNSPECIFIED RADII AND FILLETS - R0.060"

THICKNESS OF ENTIRE PART - 0.188"

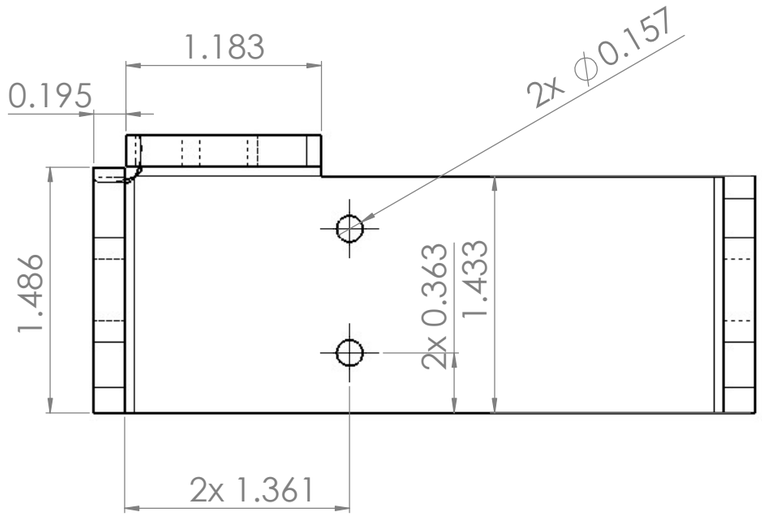

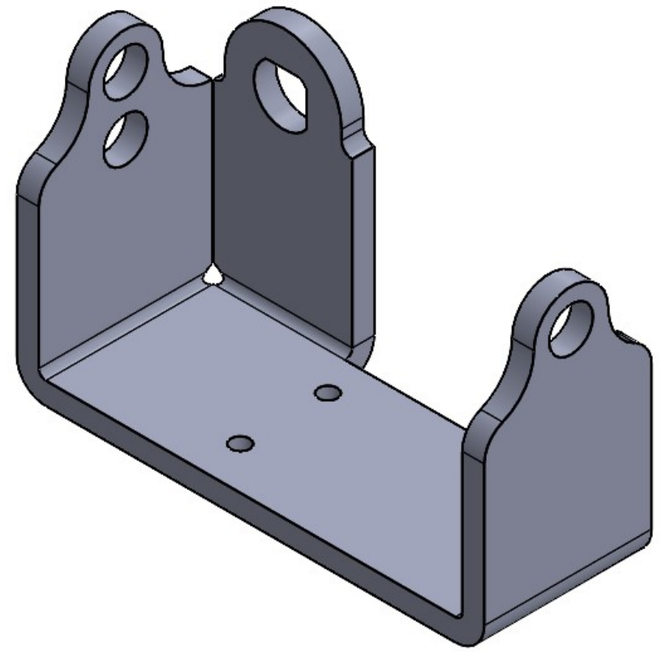

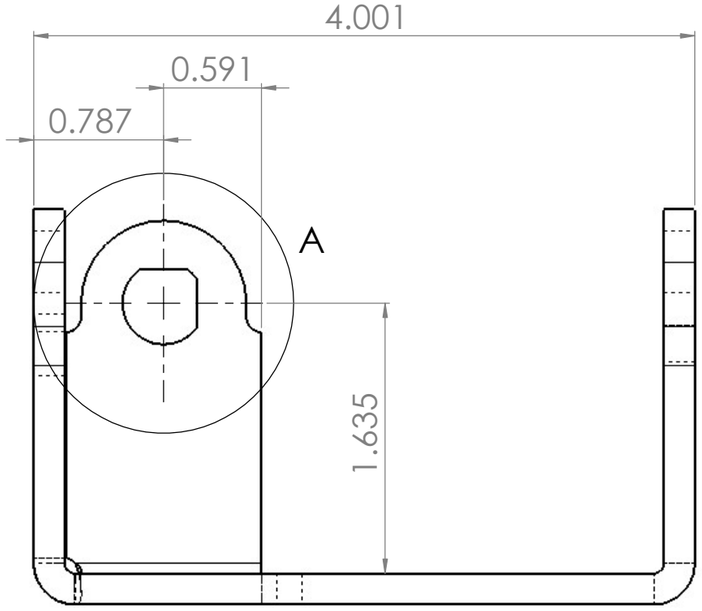

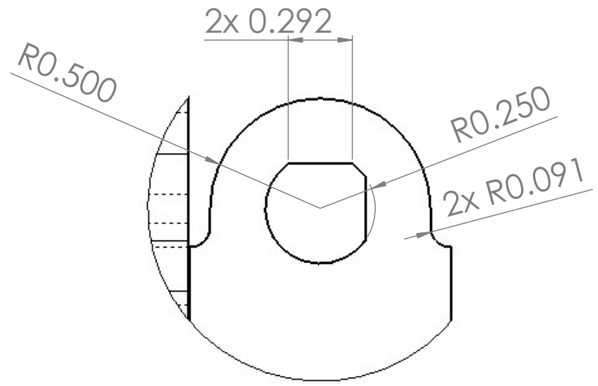

DETAIL A

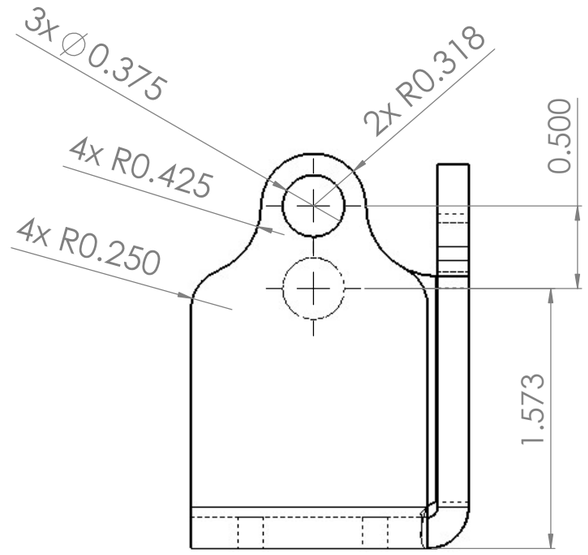

UNLESS OTHERWISE SPECIFIED: DIMENSIONS ARE IN INCHES	TOLERANCES: LINEAR: +/- .01 ANGULAR: N/A			DEBURR AND BREAK SHARP EDGES	DO NOT SCALE DRAWING / REVISION
	NAME	SIGNATURE	DATE		TITLE: ROLLER SHAFT BASE
DRAWN	Darius Irani	DI	3/17		
CHK'D					
APPV'D					
MFG					
Q.A				MATERIAL: 1.4401	DWG NO. P004 — A2
				WEIGHT:	SCALE:1.5:1 — SHEET 1 OF 1

SOLIDWORKS Educational Product. For Instructional Use Only.