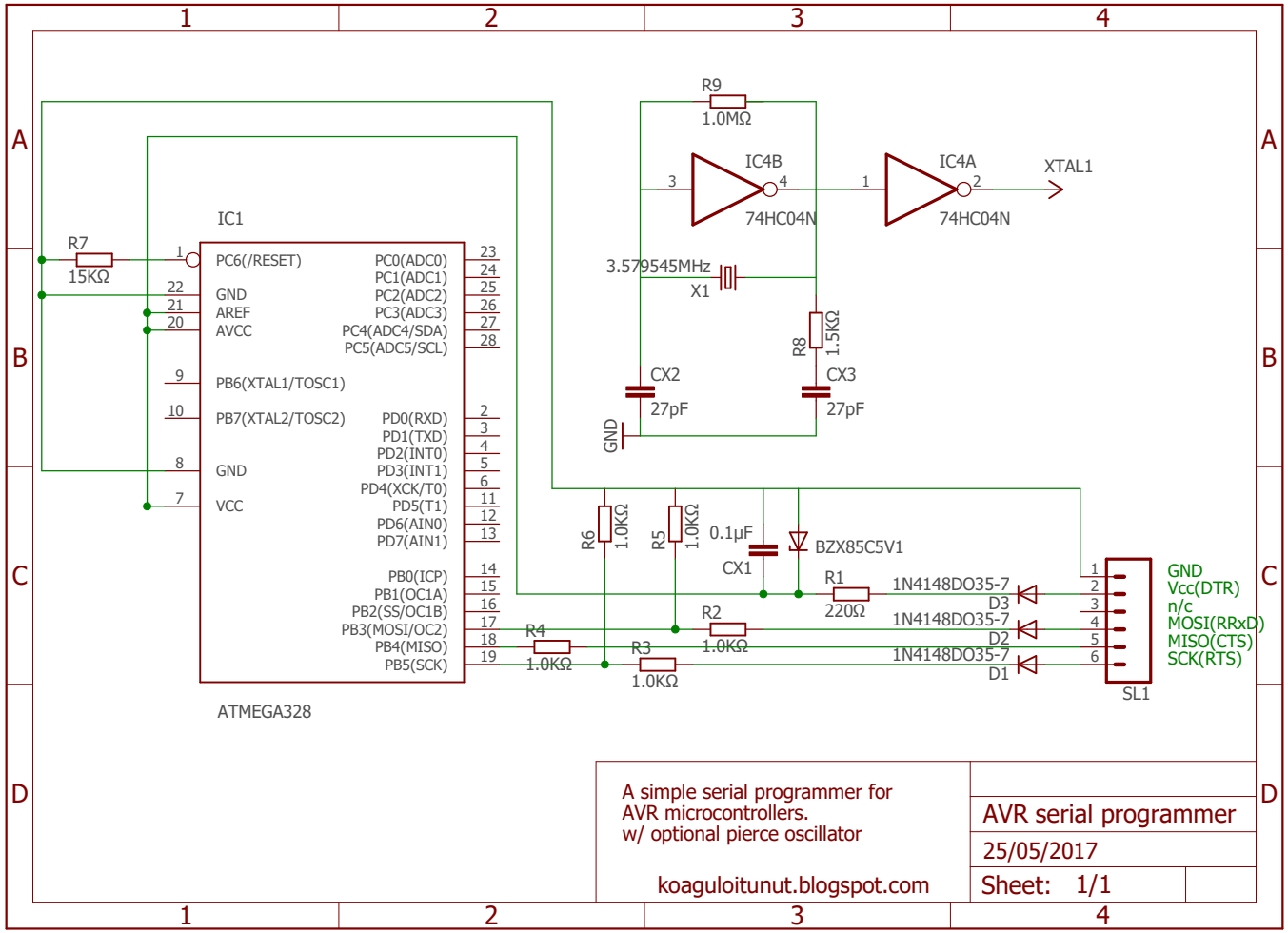

A simple serial programmer for
AVR microcontrollers.
w/ optional pierce oscillator

koaguloitunut.blogspot.com

AVR serial programmer

25/05/2017

Sheet: 1/1