Ciruit Cutting

Why Circuit Cutting?

Let us say we have the below circuit and it needs to be broken into smaller circuits. There are a few key reasons to do this

Large Circuits are noisy

What is noise?

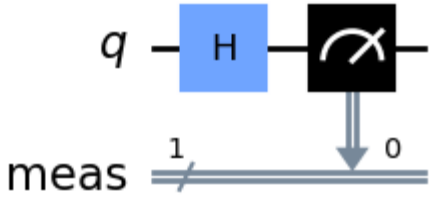

This should give us:

`50%: 0, 50%: 1`

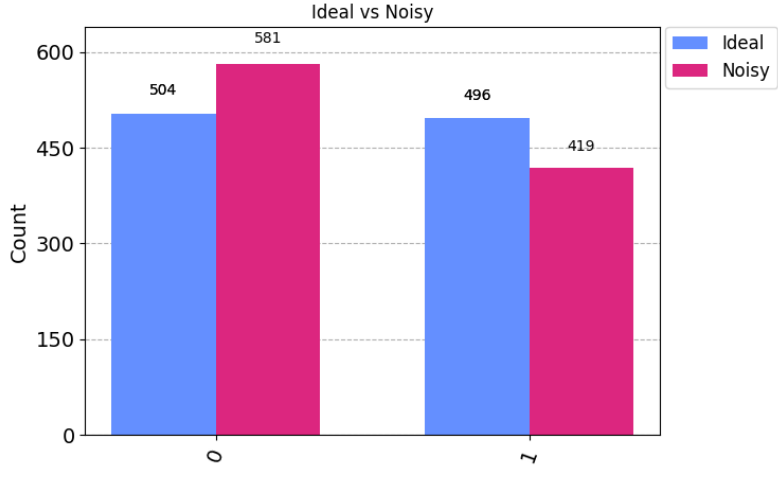

What does noise look like?

It could be *heat*, *vibration*, *material imperections*, *stray electric fields* etc. We can statistically simulate this noise

```
sim = Aer.get_backend('qasm_simulator')

backend = FakePerth()
model = NoiseModel.from_backend(backend)
cmap = sim.configuration().coupling_map

execute(
    circuit,
    simulator=sim,
    noise_model=model,
    coupling_map=cmap
).result()
```

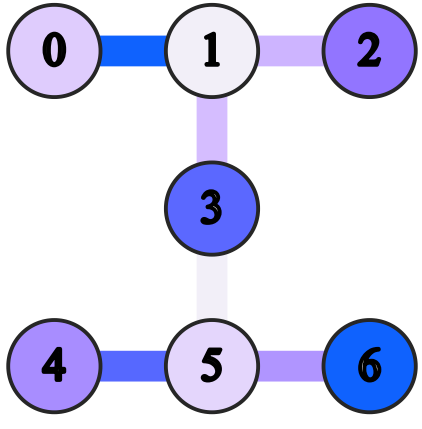

IBM Perth

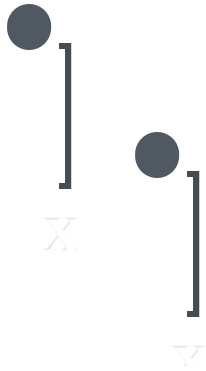

Let's model some noise with this **1 Block**

```
1  |000⟩  ▇▇▇▇▇▇▇▇▇▇▇▇▇▇▇▇  100% chance
2  |001⟩  ▒▒▒▒▒▒▒▒▒▒▒▒▒▒▒▒    0% chance
3  |010⟩  ▒▒▒▒▒▒▒▒▒▒▒▒▒▒▒▒    0% chance
4  |011⟩  ▒▒▒▒▒▒▒▒▒▒▒▒▒▒▒▒    0% chance
5  |100⟩  ▒▒▒▒▒▒▒▒▒▒▒▒▒▒▒▒    0% chance
6  |101⟩  ▒▒▒▒▒▒▒▒▒▒▒▒▒▒▒▒    0% chance
```

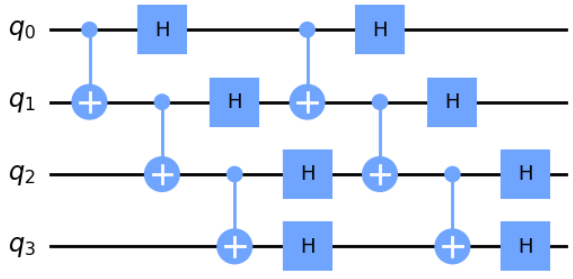
q_0
q_1
q_2
q_3
H

..N times...

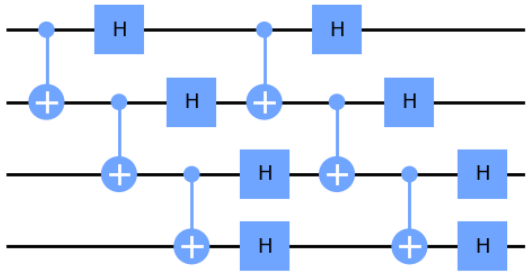
H

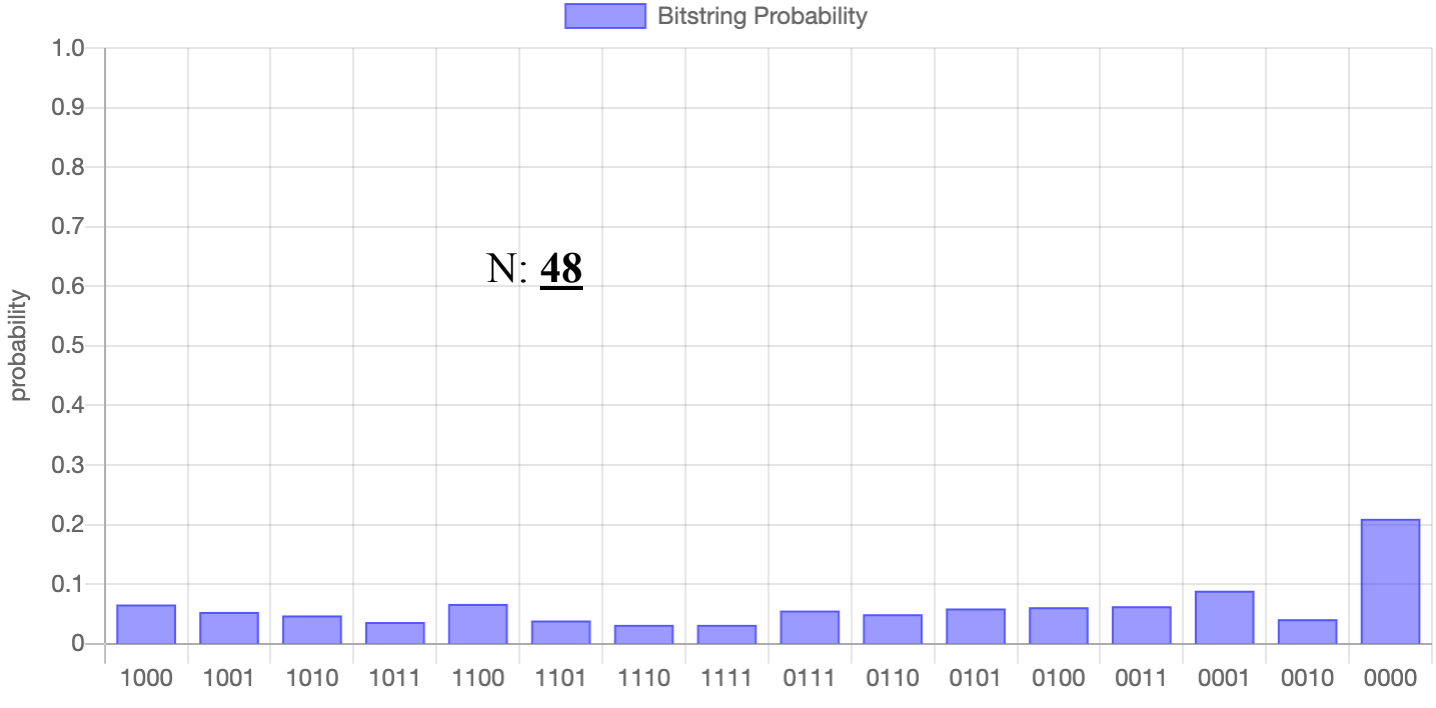
Bitstring Probability
probability
1.0
0.9
0.8
0.7
0.6
0.5
0.4
0.3
0.2
0.1
0
N: 48
1000
1001
1010
1011
1100
1101
1110
1111
0111
0110
0101
0100
0011
0001
0010
0000

Gate Cuts

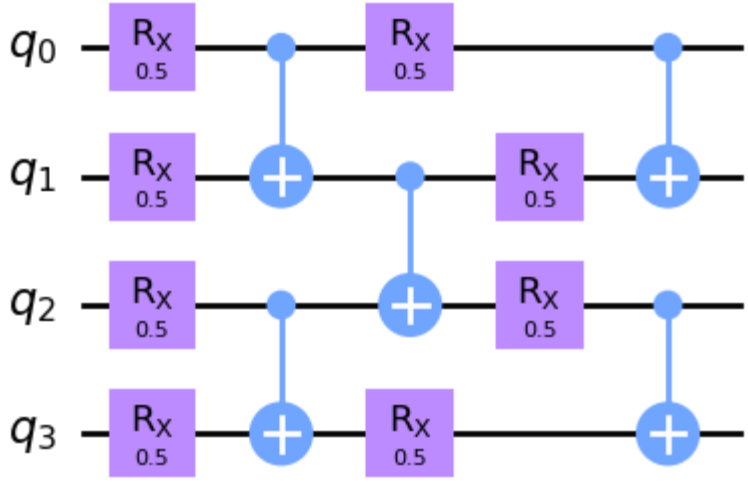

Gate Cuts

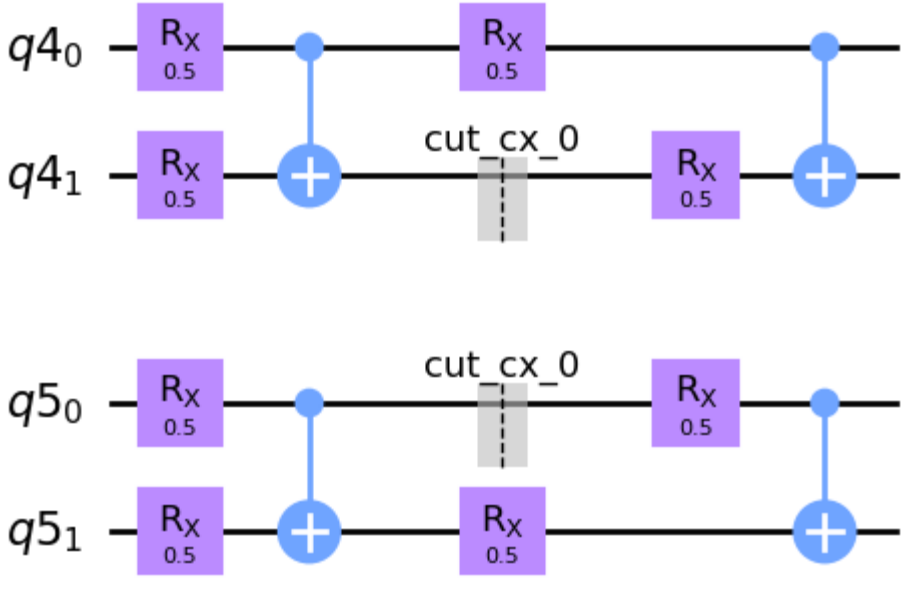

Wire Cuts

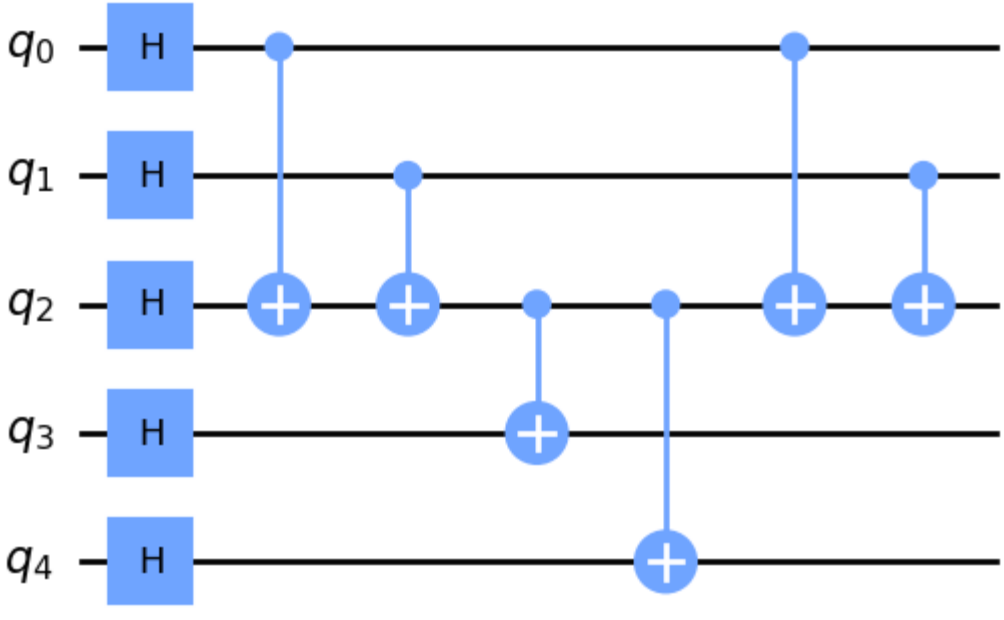

Wire Cuts

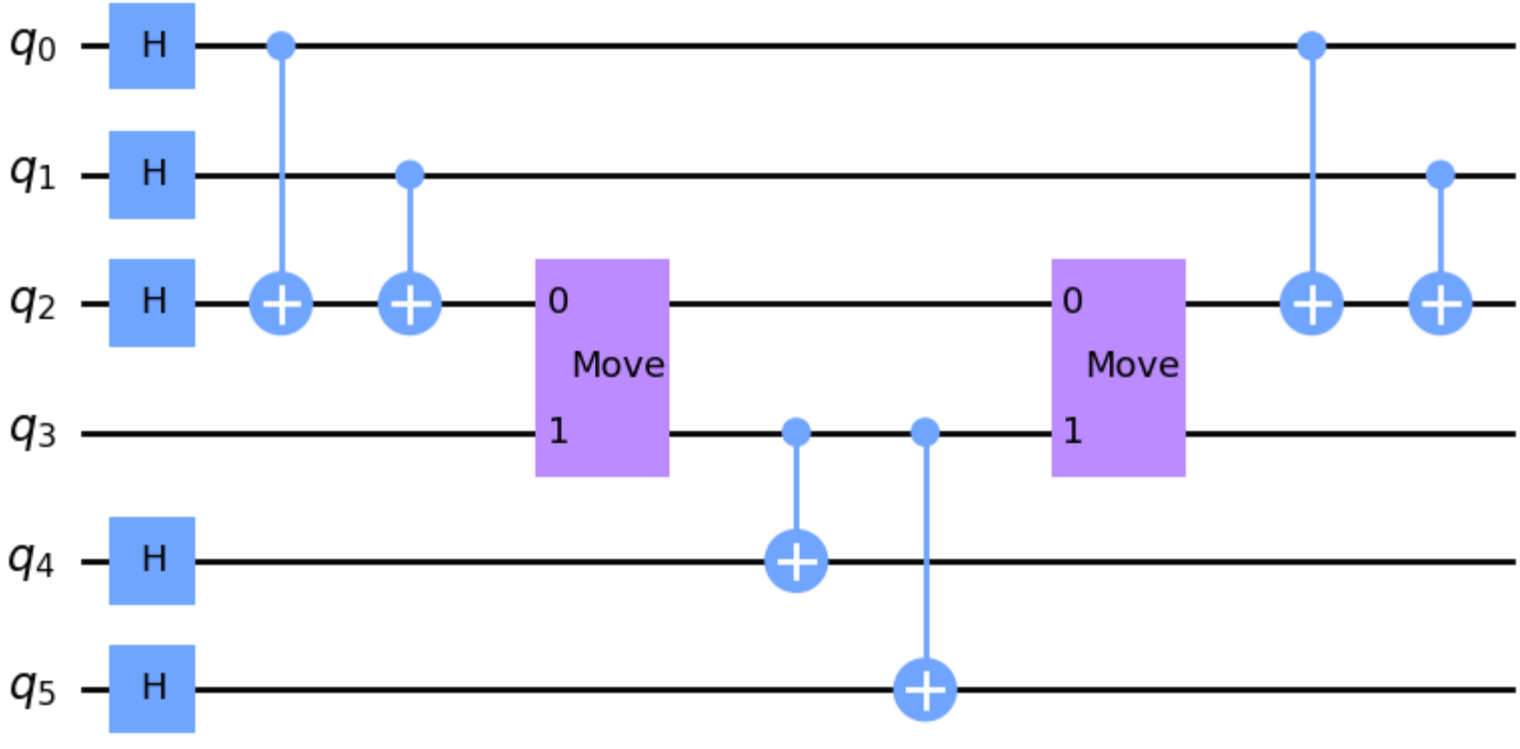

Wire Cuts

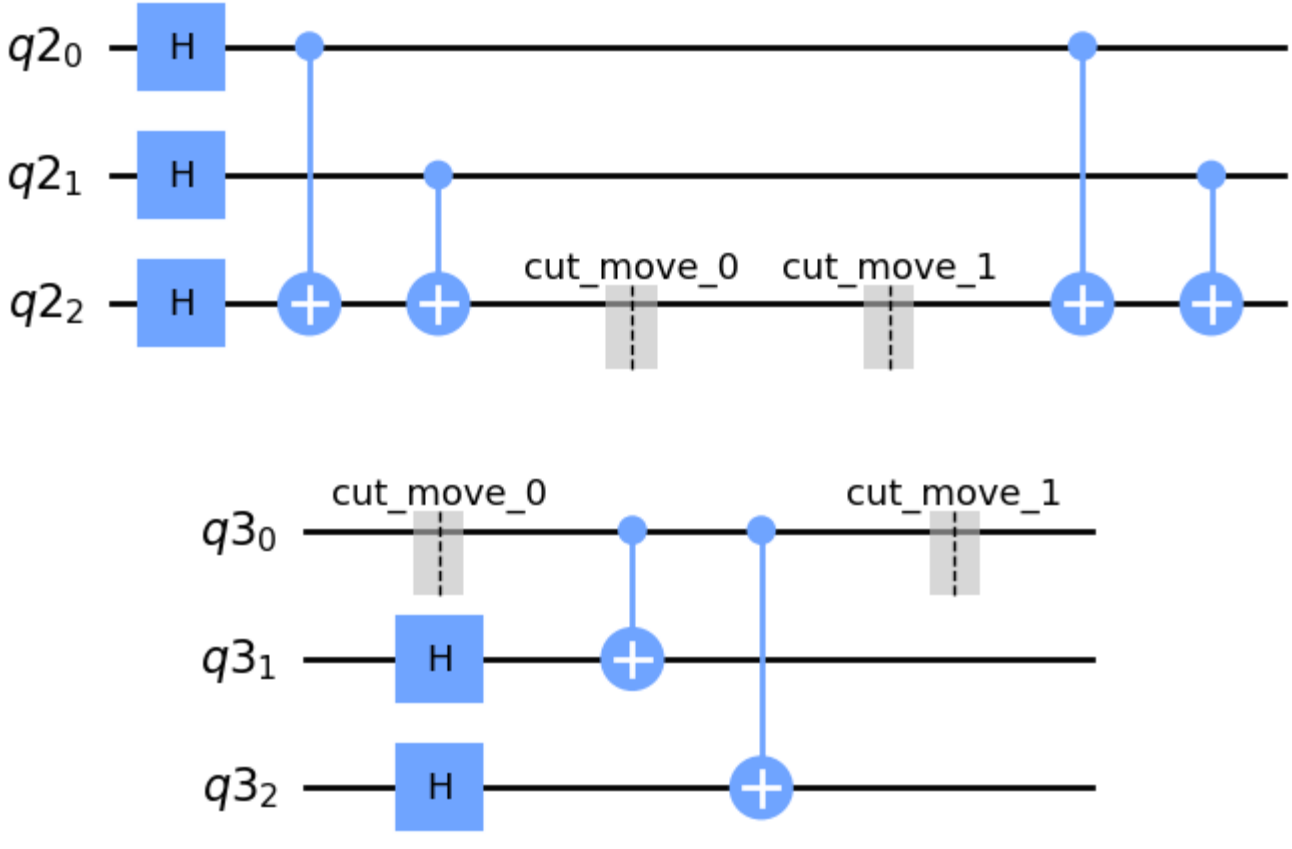
$q2_0$
$q2_1$
$q2_2$
H
H
H
cut_move_0
cut_move_1
cut_move_0
cut_move_1
$q3_0$
$q3_1$
$q3_2$
H
H

Sample Breakdown

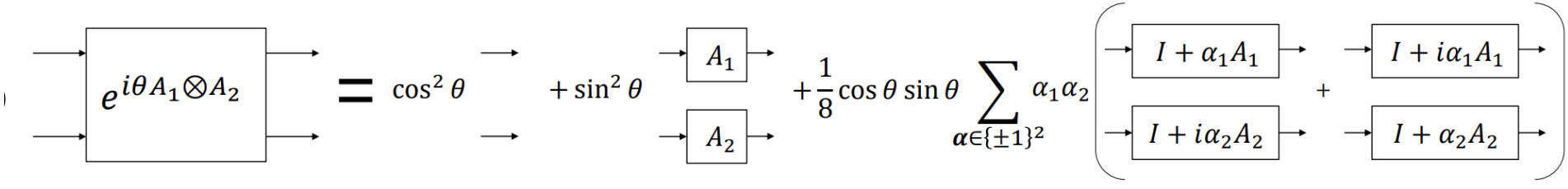

CZ Gate: $e^{-i\frac{\pi}{4}(I - Z_1)(I - Z_2)}$

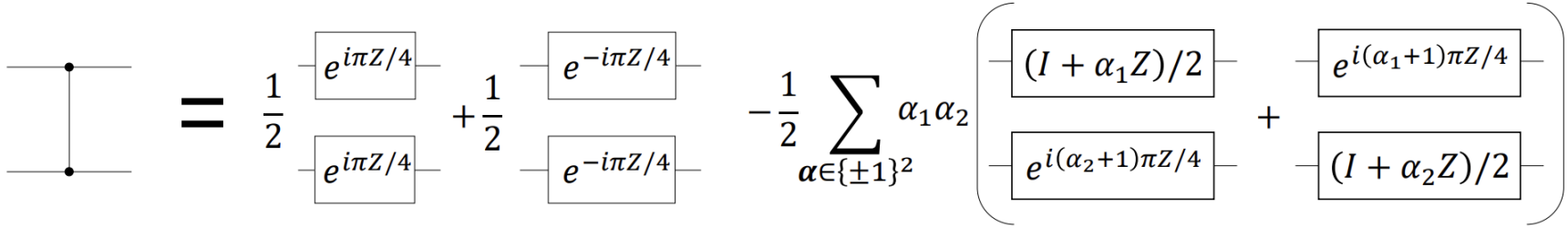

lets do an actual problem

Breaking 4-GHZ into two

1. Define our Circuit & its Observables
2. Define our Cuts
3. Determine Subexperiments & their weights
4. Run!
5. Do Stats & Compare results

Luckily setps 2,3,5 are made easy by the Circuit Knitting Toolbox

1. Define our Circuit & its Observables

```
qca = QuantumCircuit(4)
qca = QC("""
  - H
  - CX(0)
  -  CX(1)
  -    CX(2)
""")

qca.draw('mpl')
```

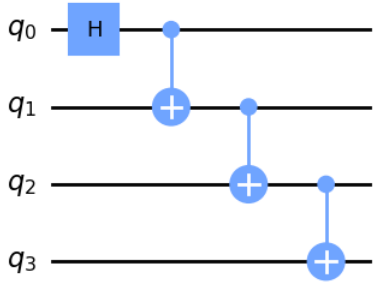


```
from circuit_knitting.cutting import partition_problem
from qiskit.quantum_info import PauliList

observables=PauliList([
  "IIII", "XXXX", "YYYY", "ZZZZ"
])
```

2. Define our Cuts

```
partitioned_problem = partition_problem(
    circuit=qca, partition_labels="AABB",
    observables=observables
) # → subobservables, subcircuits, bases

"""DRAW"""
subcircuits["A"].draw("mpl")
##
subcircuits["B"].draw("mpl")
```

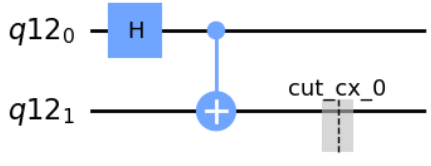

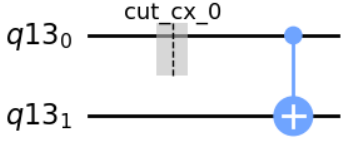

3. Determine Subexperiments & their weights

```
from circuit_knitting.cutting import \
    generate_cutting_experiments

subexperiments, coefficients = generate_cutting_experiments(
  circuits=subcircuits,
  observables=subobservables,
  num_samples=np.inf
)
```

4. Run!

```
# THE CUT CIRCUITS
samplers = {
    label: Sampler(run_options={"shots": 2**12})
        for label in subexperiments.keys()
}

results = {
    label: sampler.run(subexperiments[label]).result()
        for label, sampler in samplers.items()
}

# THE ORIGINAL: for benchmarking
estimator = Estimator(
  run_options={"shots": None}, approximation=True
)
exact_expvals = (
    estimator.run([qca] * len(observables),
    list(observables)).result().values
)
```

5. Do Stats & Compare results

```python
from circuit_knitting.cutting import \
reconstruct_expectation_values

for s, circuits in subexperiments.items():
    for i, circ in enumerate(circuits):
       results[s].metadata[i]["num_qpd_bits"] = \
            len(circ.cregs[0])

reconstructed_expvals = reconstruct_expectation_values(
    results,
    coefficients,
    subobservables,
)
```

Original Circ Values:
$[1.0, 1.0, 1.0, 1.0]$

Reconstructed Values:
$[0.9763, 1.0002, 0.9999, 1.0173]$

Open Questions

- How can we still get similar results without high overhead
- What is the best cut? Horizontal? Vertical? Hybrid?
- How well can we generalize this idea at scale

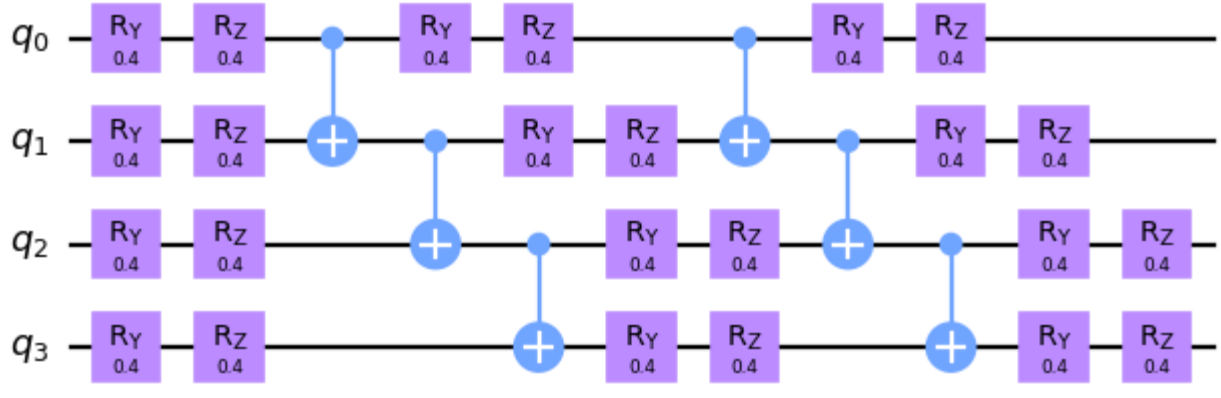

Resources

- [1] ibm.com/quantum/roadmap
- Circuit Knitting Toolbox: *qiskit-extensions.github.io/circuit-knitting-toolbox*
- [2] Mitarai & Fujii, *Constructing a virtual two-qubit gate by sampling single-qubit operations*
- [3] CZ Expectation Replication: *pastebin.com/mY2AKBNp*

Futher Reading

- Kosuke Mitarai, & Keisuke Fujii *Overhead for simulating a non-local channel with local channels by quasi-probability sampling*
- Lukas Brenner, Christophe Piveteau, & David Sutter. *Optimal wire cutting with classical communication* Kristan Temme, Sergey Bravyi, & Jay M. Gambetta (2017). *Error Mitigation for Short-Depth Quantum Circuits*