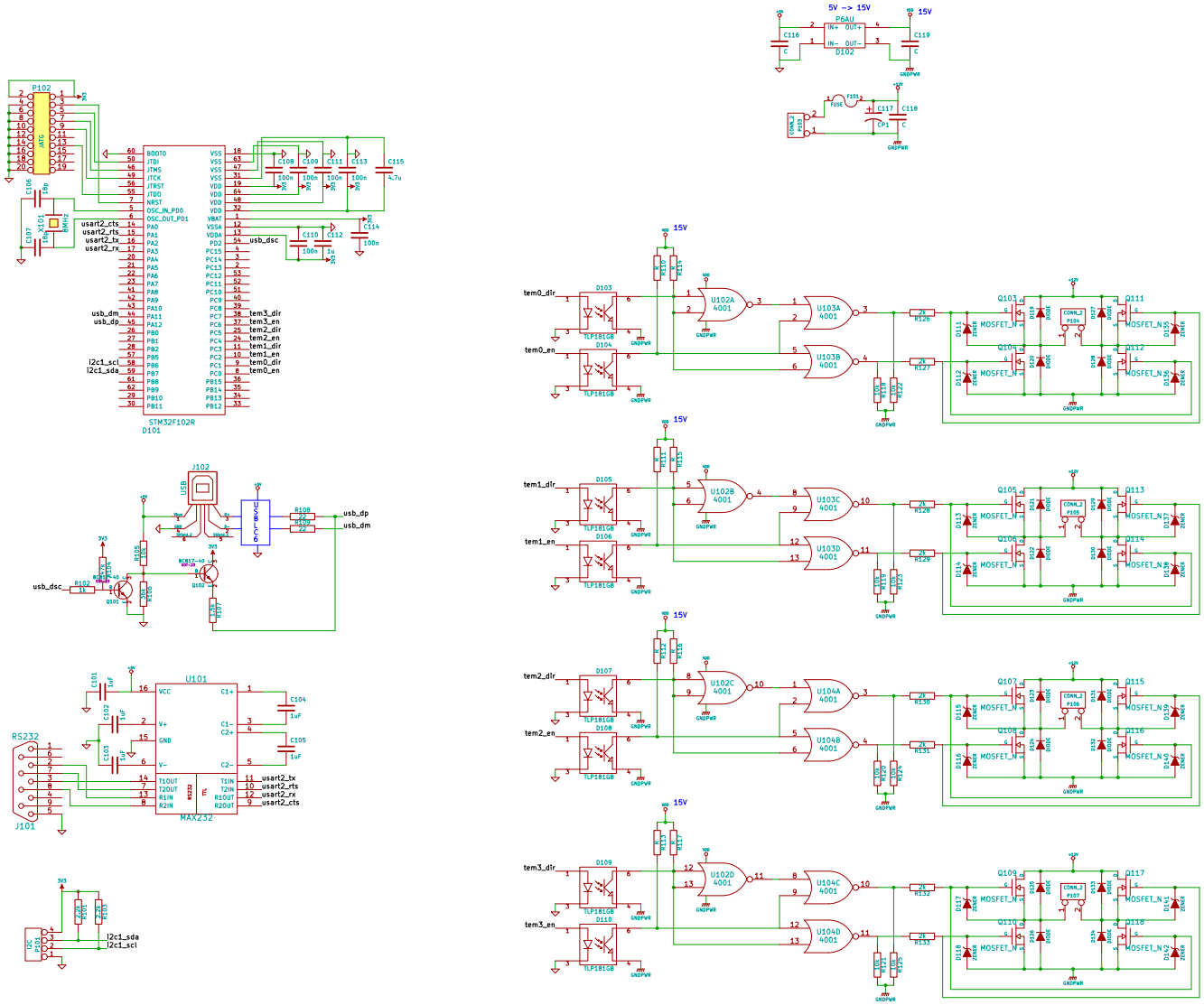

File: usb_cdc.sch	
Sheet: /	
Title:	
Size: A2	Date: 5 jun 2013	Rev:
KiCad E.D.A.	Id: 1/1