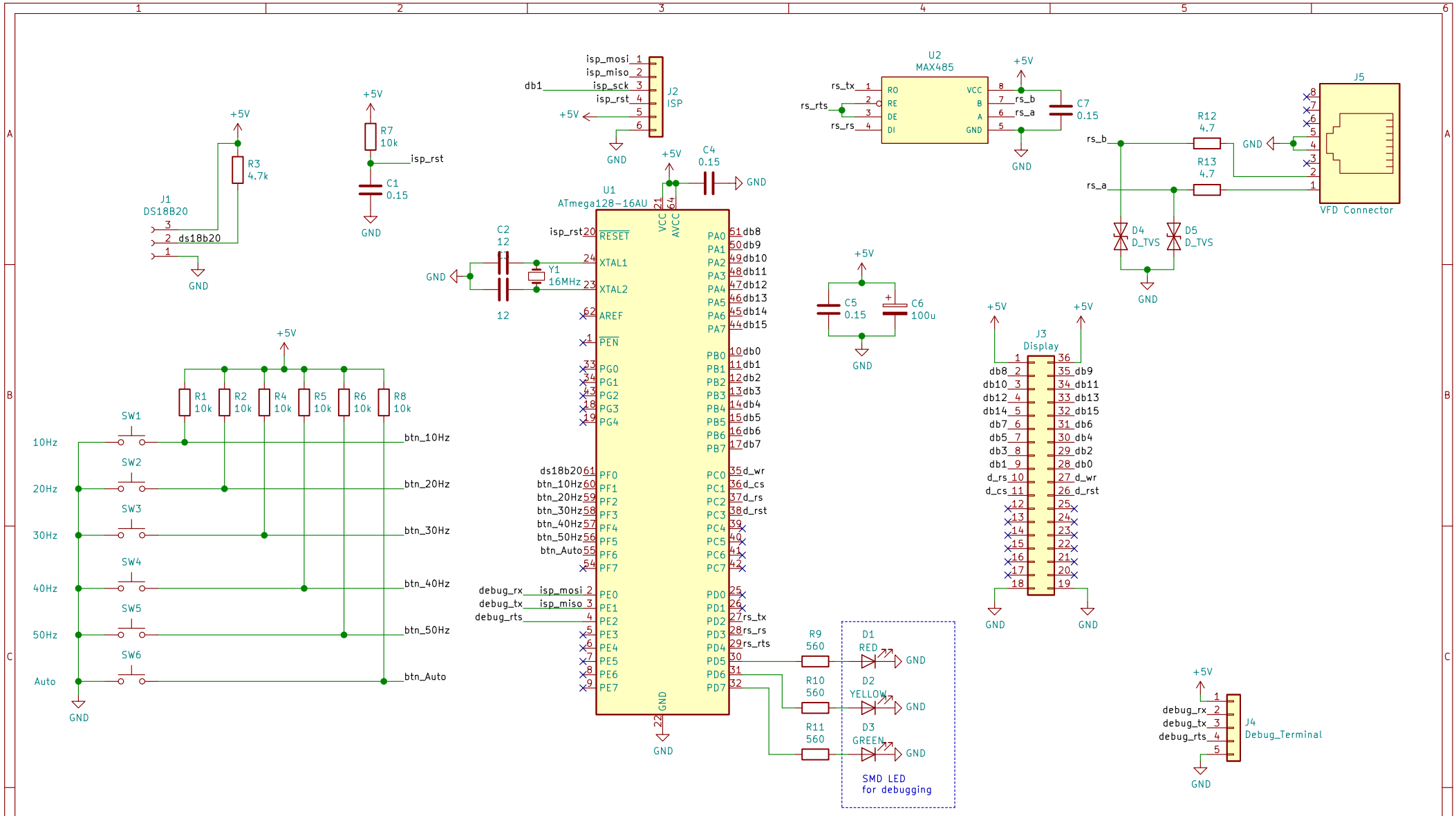

P&P

Sheet: /

File: temperature_vfd.sch

Title: Temerature VFD controller

Size: A4	Date: 2020-03-09	Rev:
KiCad E.D.A. kicad 5.1.5		Id: 1/1