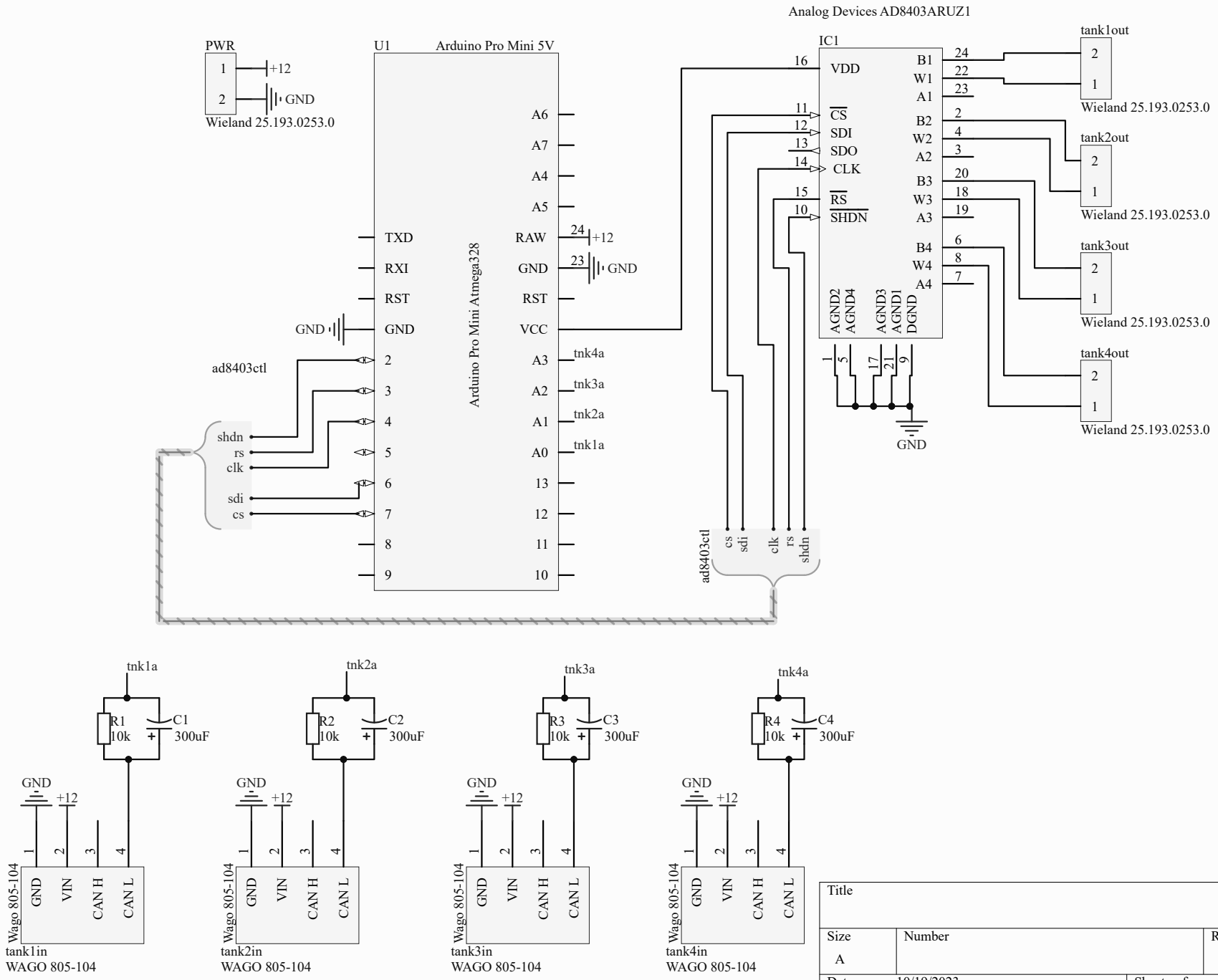

Title		
Size A	Number	Revision
Date: 10/19/2023		Sheet of
File: Schematic.SchDoc		Drawn By: