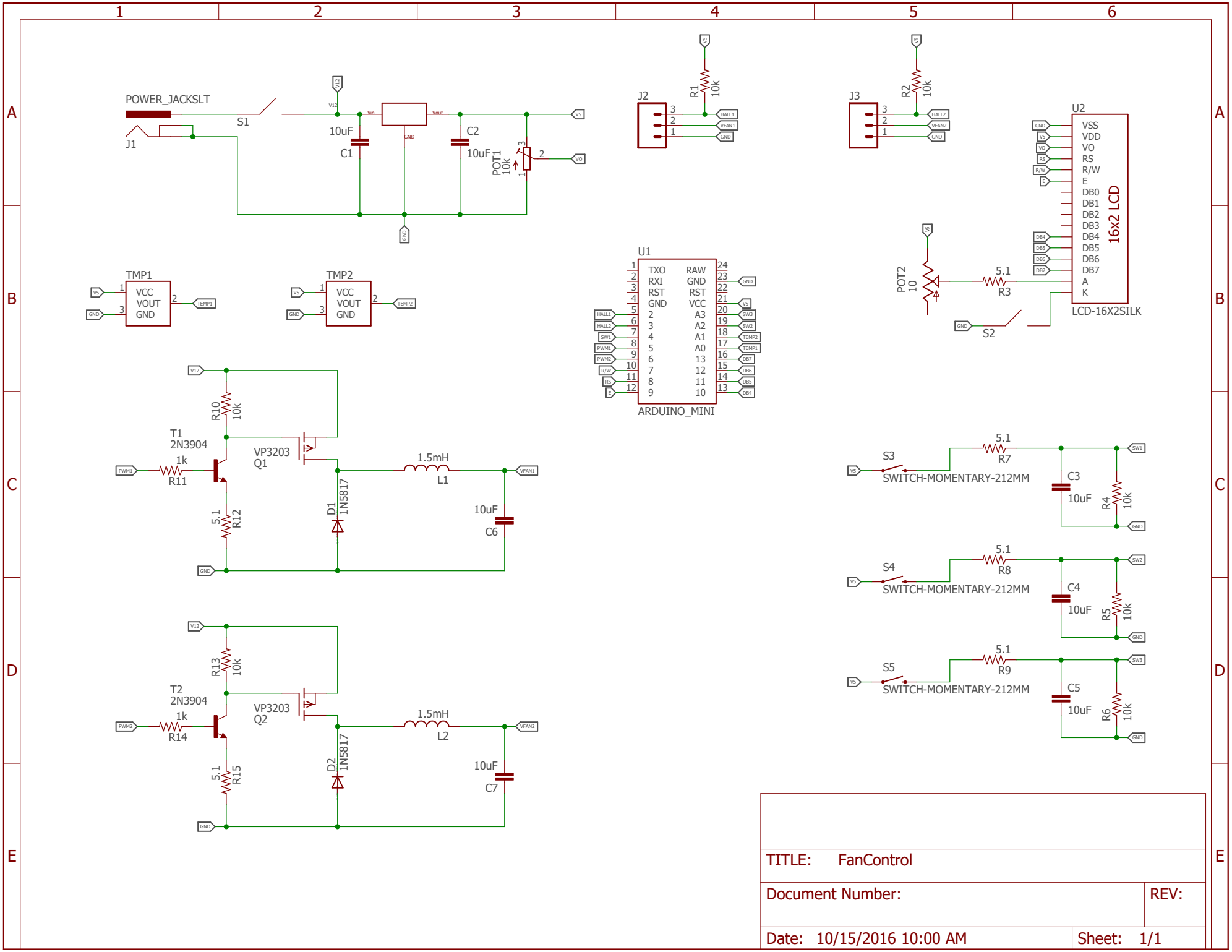
POWER_JACKSLT
J1
S1
V12
10uF
C1
Vin
Vout
GND
C2
10uF
POT1
10k
VS
VO
J2
R1
10k
HALL1
VFAN1
J3
R2
10k
HALL2
VFAN2
U2
VSS
VDD
VO
RS
R/W
E
DB0
DB1
DB2
DB3
DB4
DB5
DB6
DB7
A
K
16x2 LCD
LCD-16X2SILK
POT2
10
5.1
R3
S2
TMP1
VCC
VOUT
GND
TEMP1
TMP2
TEMP2
U1
TXO
RXI
RST
GND
RAW
A3
A2
A1
A0
VCC
SW1
SW2
SW3
PWM1
PWM2
ARDUINO_MINI
R10
10k
T1
2N3904
1k
R11
VP3203
Q1
5.1
R12
D1
1N5817
1.5mH
L1
10uF
C6
PWM1
VFAN1
R13
10k
T2
2N3904
1k
R14
VP3203
Q2
5.1
R15
D2
1N5817
1.5mH
L2
10uF
C7
PWM2
VFAN2
S3
SWITCH-MOMENTARY-212MM
5.1
R7
C3
10uF
R4
10k
S4
SWITCH-MOMENTARY-212MM
5.1
R8
C4
10uF
R5
10k
S5
SWITCH-MOMENTARY-212MM
5.1
R9
C5
10uF
R6
10k
TITLE: FanControl
Document Number:
REV:
Date: 10/15/2016 10:00 AM
Sheet: 1/1