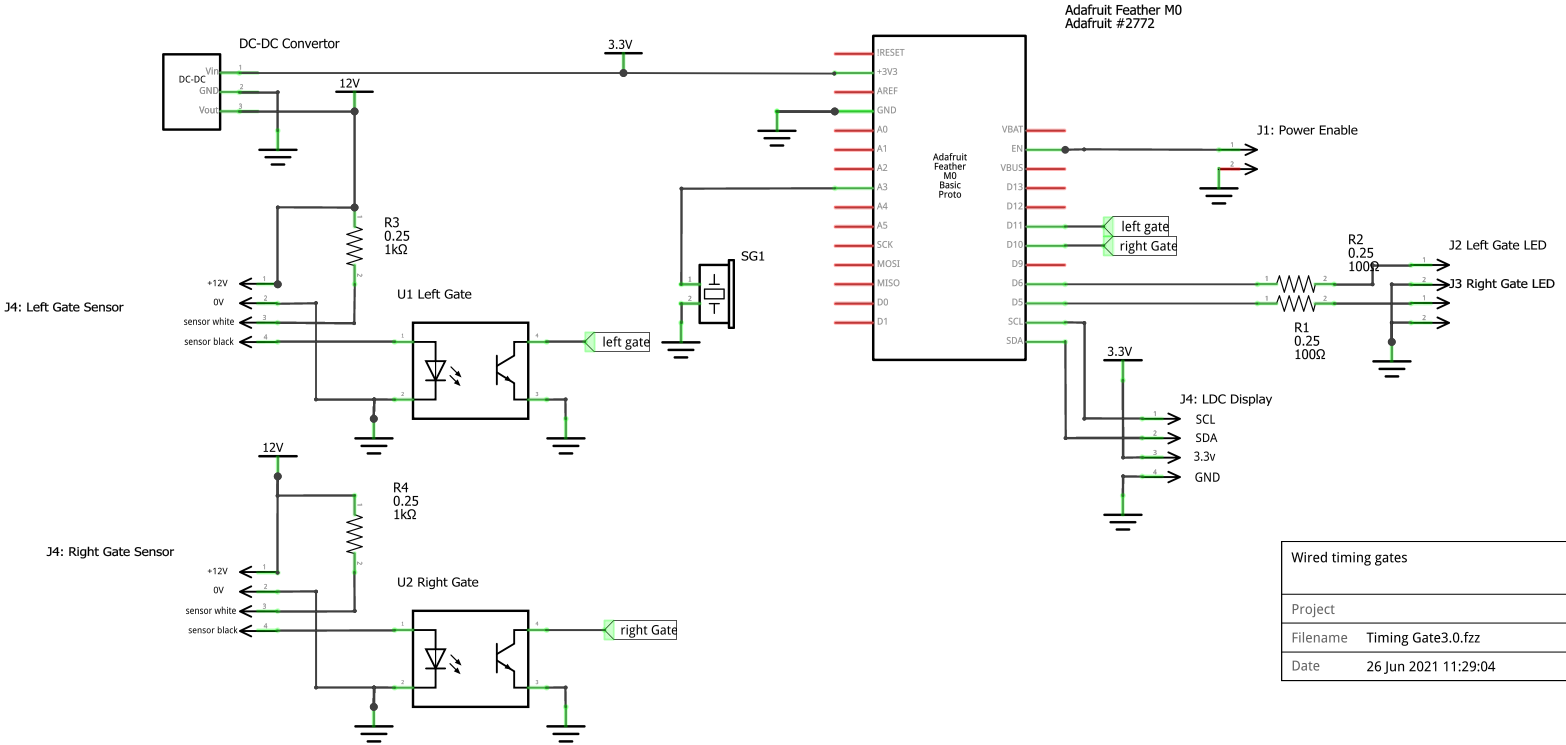
DC-DC Convertor
DC-DC
Vin
GND
Vout
12V
3.3V
Adafruit Feather M0
Adafruit #2772
!RESET
+3V3
AREF
GND
A0
A1
A2
A3
A4
A5
SCK
MOSI
MISO
D0
D1
Adafruit Feather M0 Basic Proto
VBAT
EN
VBUS
D13
D12
D11
D10
D9
D6
D5
SCL
SDA
J1: Power Enable
left gate
right Gate
R2
0.25
100Ω
J2 Left Gate LED
J3 Right Gate LED
R1
0.25
100Ω
SG1
R3
0.25
1kΩ
+12V
0V
sensor white
sensor black
J4: Left Gate Sensor
U1 Left Gate
left gate
3.3V
J4: LDC Display
SCL
SDA
3.3v
GND
12V
R4
0.25
1kΩ
J4: Right Gate Sensor
+12V
0V
sensor white
sensor black
U2 Right Gate
right Gate
Wired timing gates
Project
Filename
Timing Gate3.0.fzz
Rev
v3.0
Date
26 Jun 2021 11:29:04
Sheet
1/1
fritzing