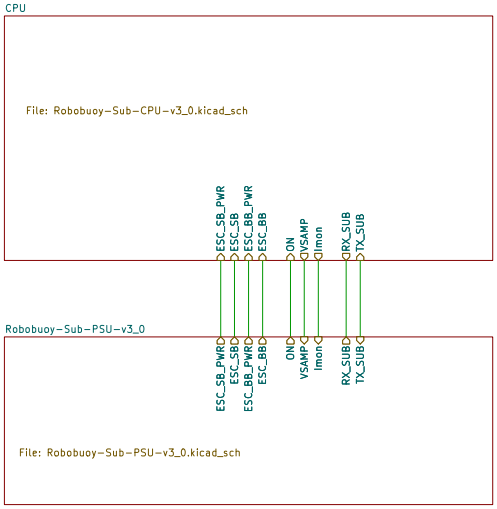

Sheet: /
File: Robobuoy-Sub-v3_0.kicad_sch

Title:

Size: A4	Date:	Rev:
KiCad E.D.A. 9.0.7		Id: 1/4

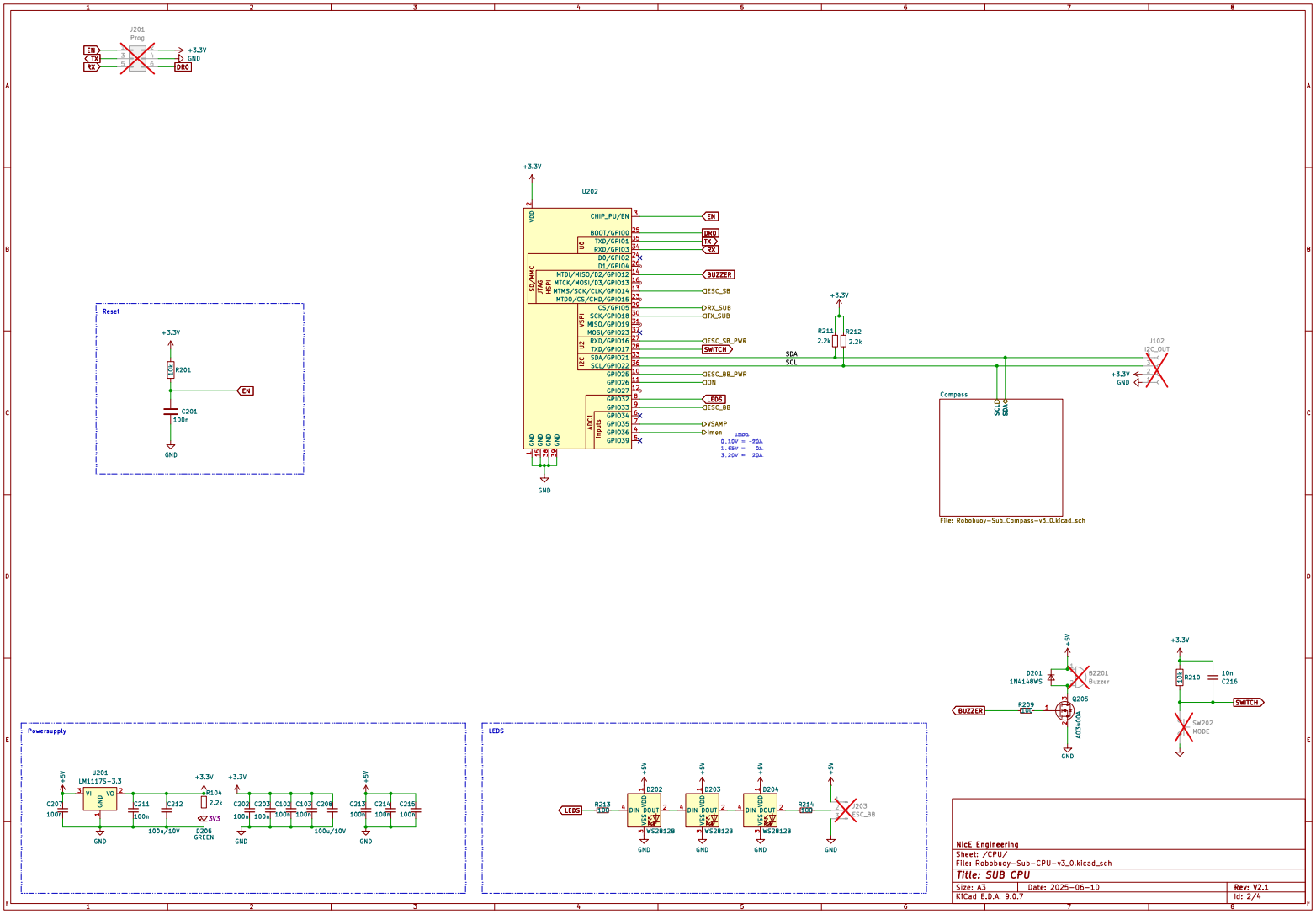
J201
Prog
EN
TX
RX
+3.3V
GND
DR0
Reset
+3.3V
R201
10k
EN
C201
100n
GND
U202
+3.3V
VDD
CHIP_PU/EN
BOOT/GPIO0
TXD/GPIO1
RXD/GPIO3
D0/GPIO2
D1/GPIO4
MTDI/MISO/D2/GPIO12
MTCK/MOSI/D3/GPIO13
MTMS/SCK/CLK/GPIO14
MTDO/CS/CMD/GPIO15
CS/GPIO5
SCK/GPIO18
MISO/GPIO19
MOSI/GPIO23
RXD/GPIO16
TXD/GPIO17
SDA/GPIO21
SCL/GPIO22
GPIO25
GPIO26
GPIO27
GPIO32
GPIO33
GPIO34
GPIO35
GPIO36
GPIO39
GND
EN
DR0
TX
RX
BUZZER
ESC_SB
RX_SUB
TX_SUB
ESC_SB_PWR
SWITCH
ESC_BB_PWR
ION
LEDS
ESC_BB
VSAMP
Imon
Imon
0.10V = -20A
1.65V = 0A
3.20V = 20A
SDA
SCL
R211
2.2k
R212
2.2k
J102
I2C_OUT
Compass
File: Robobuoy-Sub_Compass-v3_0.kicad_sch
Powersupply
U201
LM1117S-3.3
+5V
C207
100n
C211
100n
C212
100u/10V
R104
2.2k
D205
GREEN
+3.3V
C202
100n
C203
100n
C102
100n
C103
100n
C208
100u/10V
C213
100n
C214
100n
C215
100n
LEDS
R213
100
D202
D203
D204
WS2812B
R214
100
J203
ESC_BB
D201
1N4148WS
BZ201
Buzzer
R209
100
Q205
AO3400A
R210
10k
10n
C216
SW202
MODE
SWITCH
BUZZER
NICE Engineering
Sheet: /CPU/
File: Robobuoy-Sub-CPU-v3_0.kicad_sch
Title: SUB CPU
Size: A3
Date: 2025-06-10
Rev: V2.1
KiCad E.D.A. 9.0.7
Id: 2/4

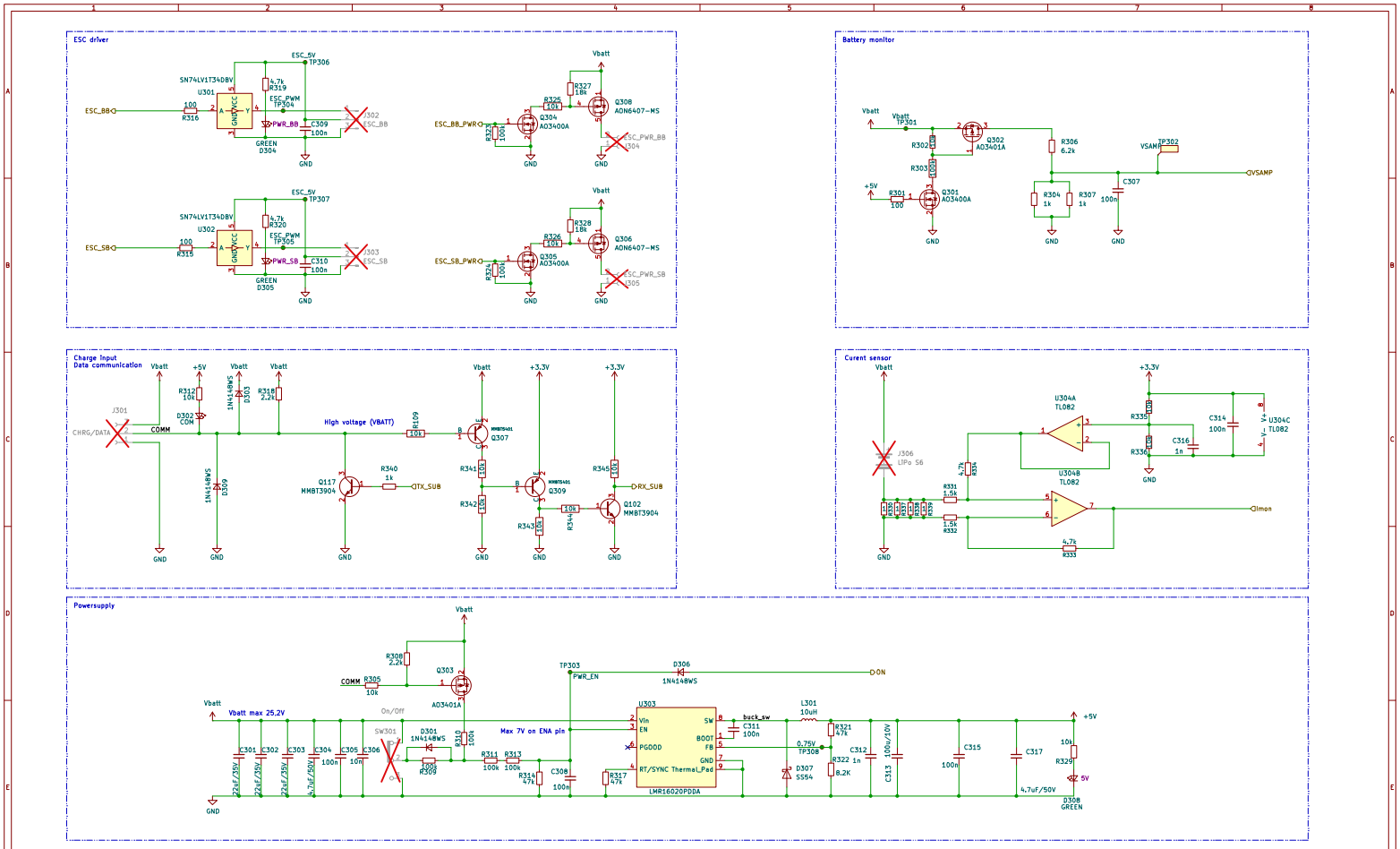

NICE Engineering

Sheet: /Robobuoy-Sub-PSU-v3_0/

File: Robobuoy-Sub-PSU-v3_0.kicad_sch

Title: NICE Buoy

Size: A3	Date: 2023-06-20	Rev: 1.1
KiCad E.D.A. 9.0.7		Id: 3/4

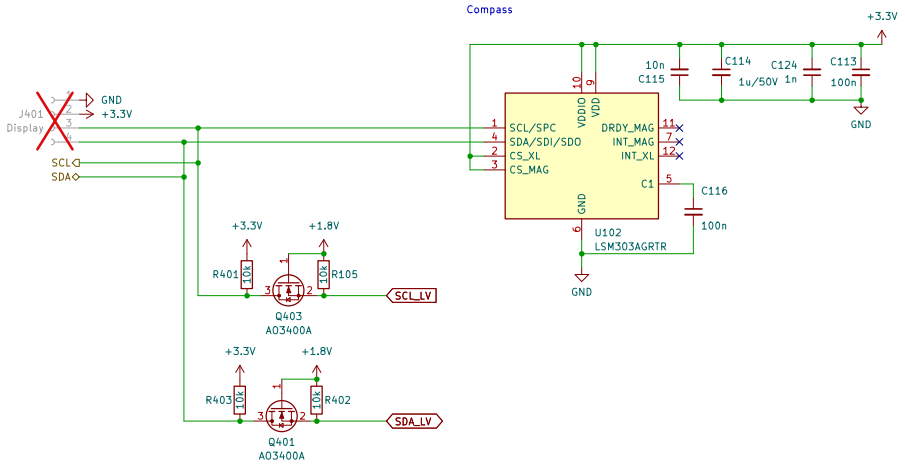

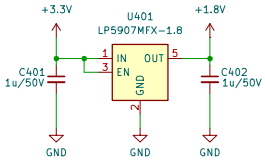

LP5907MFX-1.8 C92498
LD39015M18R C361025

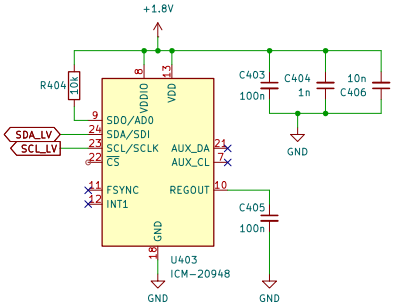

IMU-20948

PIN NUMBER	PIN NAME	PIN DESCRIPTION
7	AUX_CL	I2C Master serial clock, for connecting to external sensors
8	VDDIO	Digital I/O supply voltage
9	AD0 / SDO	I2C Slave Address LSB (AD0); SPI serial data output (SDO)
10	REGOUT	Regulator filter capacitor connection
11	FSYNC	Frame synchronization digital input. Connect to GND if unused
12	INT1	Interrupt 1
13	VDD	Power supply voltage
18	GND	Power supply ground
19	RESV	Reserved. Do not connect.
20	RESV	Reserved. Connect to GND.
21	AUX_DA	I2C Master serial data, for connecting to external sensors
22	nCS	Chip select (SPI mode only)
23	SCL / SCLK	I2C serial clock (SCL); SPI serial clock (SCLK)
24	SDA / SDI	I2C serial data (SDA); SPI serial data input (SDI)
1-6, 14-17	NC	Do not connect

NicE Engineering
Sheet: /CPU/Compass/
File: Robobuoy-Sub_Compass-v3_0.kicad_sch

Title: SUB CPU

Size: A4	Date: 2025-06-10	**Rev: V2.1**
KiCad E.D.A. 9.0.7		Id: 5/4