Mixed-Integer Differentiable Predictive Control for Data Center Chiller Plants

Data Center Cooling

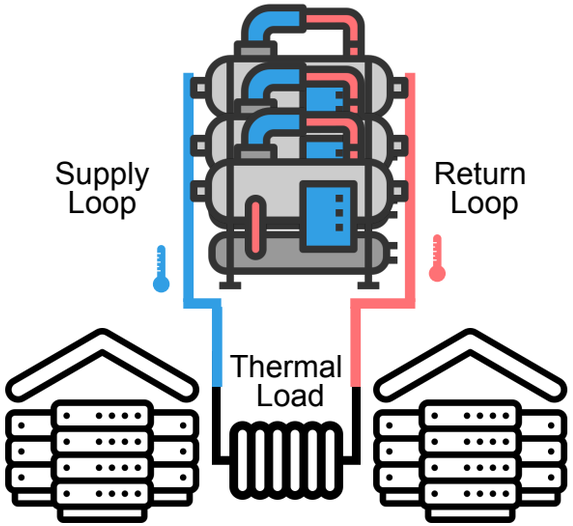

- Multiple chillers,
- Discrete ON/OFF coupled with continuous decisions,
- Nonlinear dynamics,
- Nonlinear performance curves.

Mixed-Integer Differentiable Predictive Control

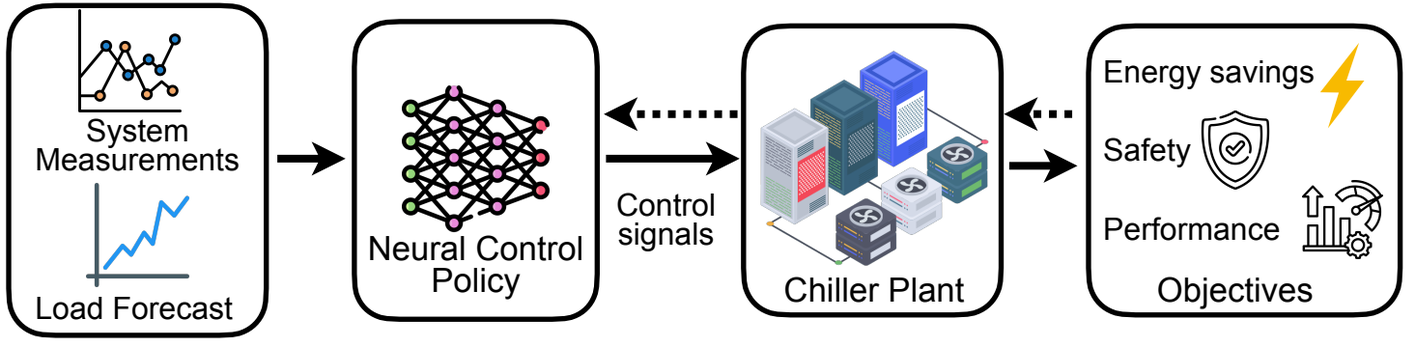

A self-supervised learning methodology for training explicit neural control policies capable of handling discrete and continuous control decisions.

- Policy synthesis time (minutes),
- Constant inference time (milliseconds),
- Computationally scalable.
- Predictive action,
- Interpretable MPC objective,
- Constraints handling.

Comparison

Model Predictive Control

- Poor scalability,
- Computationally intractable for small problems,
- Inference time varies widely.

Rule-Based Control

- Tuning requires domain expertise,
- Reactive and myopic decisions,
- No constraints handling.

Differentiable Predictive Control

- 11% of savings in comparison to rule-based control,
- No process safety violations,
- Inference time (~ 0.2ms) in contrast to (> 180s) with model predictive control