ECE 485 – Final Project - Stage 3

5-cycle Pipelined Architecture – Stall Detection

Overview

For the ECE 485 final project, you will be implementing a limited version of the RISC-V 5-cycle pipeline architecture discussed in Appendix C of your Hennessey and Patterson textbook. You will evolve this design in 4 stages:

> **Stage 1**: 5-cycle Multicycle Architecture: convert the single cycle RISC-V architecture to a 5-cycle multicycle architecture (IF-ID-EX-MEM-WB) that is NOT pipelined. Each instruction will take 5 cycles to complete before the next instruction can begin. See Figure C.18
>
> **Stage 2**: 5-cycle Pipelined Architecture: Add intermediate registers (IF_ID, ID_EX, EX_MEM, MEM_WB) to the Stage 1 architecture, so it is now pipelined. However, this stage does NOT have hazard detection and does NOT stall to prevent hazards. You will need to add NOPs to the code to ensure proper execution. See Figure C.19
>
> **Stage 3**: 5-cycle Pipelined Architecture with Stall mitigation: convert the stage 2 architecture to a pipelined architecture that has hazard detection and stalls appropriately to ensure proper execution, but does NOT have forwarding.
>
> **Stage 4**: 5-cycle Pipelined Architecture with Forwarding: convert the stage 3 architecture to a pipelined architecture that has hazard detection and stalls appropriately, plus has forwarding and branch decision moved to the ID stage, similar to Figure C.25.

The only RISC-V instructions implemented will be ADD, ADDI, SUBI, LW, SW, NOP, J, and BNE. You will also implement a custom instruction called *Load_Addr*, which is similar to LA, but only loads the address 0x10000000. Details about these instructions are in a later section.

The memory map for this architecture assumes the program memory starts at address 0x00000000, and the data memory (for the Array), starts at address 0x10000000

Program to Execute

The primary program to be executed for these 4 stages is from the RISC-V exercise:

```
        addi      x5, x0, 9       # x5 = number of values in array
        load_addr x6, array       # x6 = address of array 0X10000000
        lw        x7, 0(x6)       # x7 = initial value
loop:   addi      x6, x6, 4
        lw        x10, 0(x6)
        add       x7, x10, x7
        subi      x5, x5, 1
        bne       x5, x0, loop
done:   j         done            # infinite loop (breakpoint)

#   initialize data in the array [assumed to start at 0x10000000]
array:  .word 0x5, 0x4, 0x10, 0x3, 0x12, 0x1, 0x7, 0x4, 0x8, 0x2
```

Block Diagram

A draft of the design is given to you in RISC-V Stage 3.pptx:

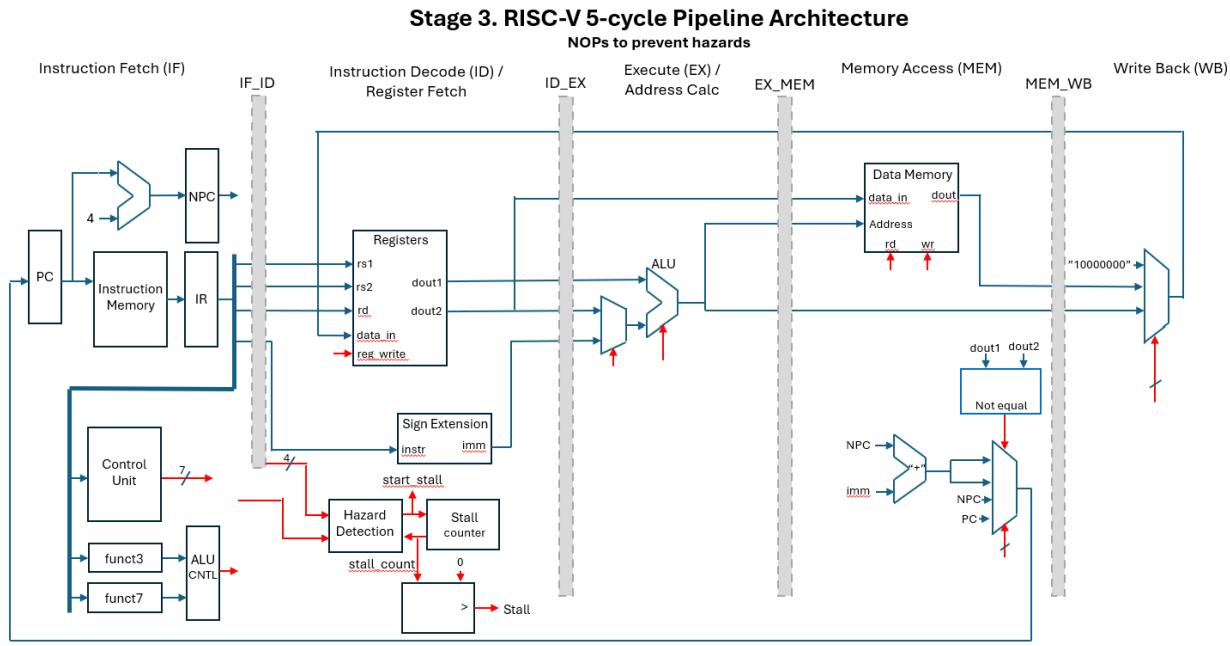

GitHub

You are also given starter-code at the GitHub repo
https://github.com/GeorgeYork/ece485_final_cadet_stage3
which includes:

riscv_pipeline.vhdl:	the top level
pc_live.vhdl	updates new program counter [do not change]
pipeline_registers.vhdl	Temporary registers between each state (labeled with prefix *IF_ID, ID_EX, EX_MEM, MEM_WB*) to move an instruction from state to state.
hazard_detection.vhdl	Monitors the data dependencies and branch decision delays to stall the processor
instr_mem.vhdl	instruction memory. Holds assembly program to execute
reg_file.vhdl	The 32 32-bit Registers [do not change]
control_unit.vhdl	Given the instruction OPCODE, outputs the control signals *reg_write, mem_read, mem_write, alu_src, branch, load_addr, jump* [do not change]
immediate_generator.vhdl	Given the instruction, pulls out and sign extends (to 32-bits) the immediate value for each type of instruction. [do not change]
alu_control.vhdl	Given funct7 and funct3 for an instruction, outputs the alu_op (alu operation) to perform
alu.vhdl	Performs the arithmetic logic unit operation (ADD, SUB, etc) on two operands.
data_mem.vhdl	The data memory. Holds the array of values to be summed, starting at address 0x10000000 [do not change]

tb_riscv_pipeline.vhdl	Test bench to test overall architecture [do not need to change]
tb_riscv_pipeline_behav.wcfg	Waveform configuration file, set up to have the required signals in the simulation plot for the main program test
RISC-V Stage 3.pptx	Draft block diagram of Stage 3

Fork and Clone and open the project ece485_final_cadet_stage3.

Details of Instructions

ADD	R-Type Instruction *add rd, rs1, rs2 # rd = rs1 + rs2* rd: destination register (where the result is stored) rs1: first source register rs2: second source register **Instruction Format**: "<7-bit funct7> <5-bit rs2> <5-bit rs1> <3-bit funct3> <5-bit rd> <7-bit opcode>" funct7= "0000000" funct3= "000" Opcode= "0110011"
ADDI	I-Type Instruction *addi rd, rs1, imm # rd = rs1 + imm* rd: destination register rs1: source register imm: immediate, sign extended to 32-bit **Instruction Format**: "<12-bit imm> <5-bit rs1> <3-bit funct3> <5-bit rd> <7-bit opcode>" funct3= "000" Opcode= "0010011"
LW	I-Type Instruction: Load Word from Memory *lw rd, imm(rs1) # rd = memory[rs1 + imm]* rd: destination register rs1: register containing base address (or pointer) imm: immediate, sign extended to 32-bit; offset to be added to pointer **Instruction Format**: "<12-bit imm> <5-bit rs1> <3-bit funct3> <5-bit rd> <7-bit opcode>" funct3= "010" Opcode= "0000011"
SW	Not implementing this year
BNE	B-Type Instruction: *bne rs1, rs2, imm # PC = PC + 4 + imm, if rs1 is not equal to rs2* imm: immediate, sign extended to 32-bit; offset to be added to PC + 4 **Instruction Format**: "<imm[11]> <imm[9:4]> <5-bit rs2> <5-bit rs1> <3-bit funct3> <imm[3:1]> <unused bit><imm[10]><7-bit opcode>" funct3= "001" Opcode= "1100011". So the final PC = PC + 4 + (sign extend)(imm[11:1]) Note: for our implementation, imm[11:1] points to a byte [not word or 16-bit] Unused bit is due to shifting right, which drops least significant bit.

Custom Instructions [replacing Psuedo-instructions]:

J	In the RISC-V architecture, J (jump to label) is a pseudo-instruction, where *j label* is replaced with *jal rd, imm # jump to PC = PC + 4 + (sign extend) imm* You will add a custom J instruction to your implementation. J-Type Instruction: *j imm # PC = PC + 4 + imm* imm: immediate, sign extended to 32-bit; offset to be added to PC + 4 **Instruction Format**: "<imm[20]> <imm[10:1]> <imm[11]> <imm[19:12]><5-bit rd> <7-bit opcode>" rd = not used "00000" Opcode= "1101111". So the final PC = PC + 4 + (sign extend)(imm[20:1]) Note: for our implementation, imm[20:1] points to a byte [not word or 16-bit]
SUBI	In the RISC-V architecture, SUBI (subtract immediate) is a pseudo-instruction, where *subi rd, rs1, imm # rd = rs1 - imm* is replaced with addi rd rs1, imm #. rd = rs1 + -imm You will add a custom SUBI instruction to your implementation. **Instruction Format**: "<12-bit imm> <5-bit rs1> <3-bit funct3> <5-bit rd> <7-bit opcode>" funct3= "001" Opcode= "0010011"
Load_Addr	In the RISC-V architecture, there is a LA pseudo-instruction, which loads an address in a register to be used as a pointer to a data array. Since we cannot have a load with a 32-bit immediate value, this pseudo-instruction is replace with two instructions to create the 32-bit value: *auipc x5, offset[31:12]* *addi x5, x5, offset[11:0]* Instead of doing this, we will create a custom instruction called load_addr, which always loads the fixed value of our array 0x10000000. **Instruction Format**: "<20-bit don't care> <5-bit rd> <7-bit opcode>" rd = destination register Opcode= "0010111"
NOP:	In the RISC-V architecture, NOP is actually a pseudo-instruction, which is replaced by an instruction that does nothing, *addi x0, x0, 0*. In stage 2, you will implement a NOP instruction, but instead of using the ADDI, you will use the **32-bit instruction "0x00000000**", and when detected, your system will set all the control signals to zero (reg_write <= '0'; alu_src <= '0'; mem_read <= '0'; mem_write <= '0'; branch <= '0'; jump <= '0'; load_addr <= '0'; see control_unit.vhdl

Tasks

By Taps Lesson 38, complete these tasks for Stage 3. For Stage 3, you will modify your a 5-stage pipeline to have hazard detection and then stalls appropriately to ensure proper execution, but does NOT have forwarding.

1. Read through the given modules to understand the code, fix/complete the code, and update/complete the block diagram RISC-V Stage 3.pptx to match your design, labeling the correct signal names and connecting or labeling the red control signals. Turn the completed diagram in via gradescope and copy to your repo (share your repo with your instructor).
    a. You will use your instr_mem.vhdl from stage 1.
    b. Update pipeline_registers.vhdl to move key registers/signals from state to state [this may be the same as stage 2, unless you find you need some other registers for stall detection]. Note that start_stall and stall_counter have been added as input signals, to allow you to insert a NOP (all control signals = '0') during a stall cycle.
    c. Update hazard_detection_unit.vhdl to create the *start_stall* signal when a data or control hazard is detected. In our simplified design, we will only look one instruction prior (not two prior) for data dependencies.
    d. Update riscv_pipeline.vhdl, removing syntax errors and ensuring correct operation of Stage 3. [many of these updates can be copied from riscv_pipeline.vhdl from stage 2] Hint: one way to stall your processor is to let next_pc <= pc

2. **Test Main Program**: Run simulation in vivado, testing the main program works, including necessary signals, which as a minimum should include:
    Clk, reset, clock_counter, pc, NPC, next_PC, if_id_npc, id_ex_npc, ex_mem_npc, instr, opcode, if_id_rs1, reg1_data, if_id_rs2, reg2_data, mem_wb_rd, wb_data, if_id_imm, alu_input_a, alu_input_b, alu_result, mem_data, mem_read, mem_write, alu_src, id_ex_alu_src, branch, ex_mem_branch, jump, ex_mem_jump, load_addr, reg_write, reg_write_chip, display_x5, display_x6, display_x7, display_x10
    Turn in your simulation plot in gradescope.

3. Answer the following questions in gradescope:
    a. How many clock cycles to complete (end of first call to jump's WB stage)?
    b. What was the final value of register 5?
    c. What was the final value of register 7?
    d. How do the above answers compare to your expectations from the RISC-V exercise?

4. Push all code to your github repo and share with your instructor [instr_mem.vhdl should be the version with the NOPs inserted]

Policy if Stage 2 not working

If your stage 2 code is not working, you can either attempt to get it working before implementing Stage 3, or for a cost of 10 points of your Stage 3 grade, your instructor can give you a working version of stage 2 to start from.

Grading – Stage 3

Item	Points	Out of
Updated block diagram		15
Updated pipeline_registers.vhdl		15
Updated riscv_pipeline.vhdl		20
Update hazard_detection_unit.vhdl		20
Test Main Program		20
Questions in Gradescope on Main Program		10
Late Penalties (-25 points per day late) Instructor Provide Stage 1 code (-10 points)		
Total		**100**

GenAI and Collaboration Policy

For this assignment, use of generative AI (e.g., ChatGPT) or search engines is “level 2: Use of GenAI for brainstorming or idea generation.” For example, you can prompt GenAI on how to implement basic hardware in VHDL, such as “how to you implement a 32-bit register in VHDL?” “How to you implement a multiplexer using the *when* statement?”, or ask basic questions about the RISC-V Stage 3 pipeline architecture, like “why is the ALU controller separate from the Control Unit in RISC-V?”; however, any coding must be your own work. Do not ask GenAI to produce specific code for this assignment, like “Given this VHDL code for the ALU, add the SUBI function.”
Any use of GenAI or internet searches must be clearly documented, including all prompts used. Failure to follow this policy will result in **NO** academic credit. One warning about GenAI and RISC-V: besides the common problem of GenAI hallucinations, there are different versions of RISC-V, different from this assignment, so GenAI could lead you astray.

The only collaboration allowed with classmates is for general questions, such has how to implement VHDL code, like “how to make a process statement to implement a register”, not for specific coding in this assignment, or for general concepts regarding the blocks in the block diagram. All coding must be your own work. Do not look at each other’s code. You are not allowed to have another student look at your code to help with debugging, unless given specific authorization from your instructor. All collaboration must be clearly documented; copying another person’s work, with or without documentation, will result in **NO** academic credit.