Manufacturing Networks Techonology

Data integration of Mini 5-axis CNC System

11/23 (Wed.)

Teammate

108303503 楊佩錡, 108303045 顏靖家
108303013 黃鉦淳, 108303529 顏宏庭
108303051 石選立

Contents

- Machine Intro
- How to achieve the goal
- Expected goal
- Current Progress
- Work Distribution

Machine Intro

產品規格

Mini 5- Axis CNC	CNC 複合加工機
機械尺寸(深*寬*高)	75*70*172cm
主軸/ 工作台	
最高轉速	2400rpm
最大功率	750W
工作台直徑	φ130mm
進給軸	
行程	X:200mm ; Y:150mm; Z:180mm ; B: (+) 110。~ (-30)。 ; C: 360。
馬達解析度	17 BIT/ REV
重現精度	X/Y/Z: (+) (-)2μm B/C: (+) (-) 10/ARC SEC
不包含國外試車，若需國外試車，買方需付來回機票、膳宿、伙食等費用 (選配)	

https://www.lihwoei.com.tw/mini5-axis-cnc-tw

How to achieve the goal

GET

Medium : Ethernet Cable

Protocol : TCP/IP

Program : Python

API : C# dynamic link library(dll)

PUT

Application : OPC UA

Program : Python

Data : Mini 5-axis CNC system status

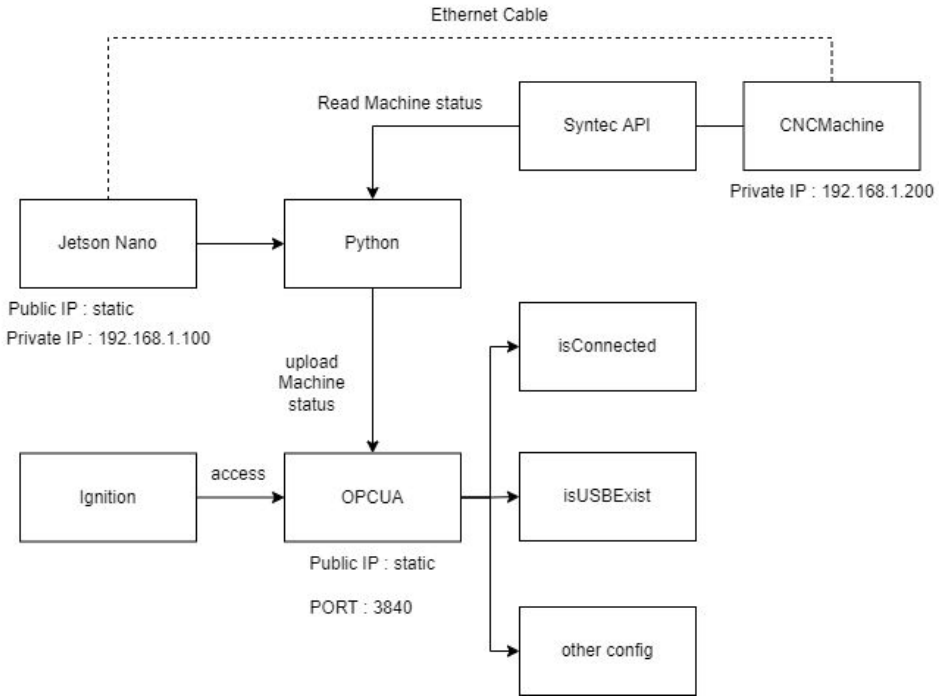

Expected Goal - params

- isUSBExist : Whether the USB is plugged in
- SeriesNo : Controller serial number
- MainBoardPlatformName : Controller mainboard format
- READ_information : Basic related information
- READ_status : Status information
- READ_position : Position information
- READ_gcode : Read G code data
- READ_spindle : Speed / Feed Rate
- READ_time : Power on time / Work time / Accumulate cutting time
- READ_part_count : Number of workpieces
- READ_alm_current : Current alerts
- READ_nc_OPLog : Obtain operation records

Expected Goal - UI

- By reference to the monitor and attempt to reproduce in Ignition user interface

Current Progress

- Checking how to connect between Jason Nano and the CNC machine

  -> using Syntec API and a Eternet Cable

- Spread the workload

Work Distribution

- OPC UA : 楊佩錡、顏靖家
- Building environment : 黃鉦淳
- Ignition : 顏宏庭
- Integration of other teams : 石選立

Thanks for listening!