Manufacturing Networks Techonology

Data integration of Mini 5-axis CNC System

12/21 (Wed.)

Teammate

108303503 楊佩錡, 108303045 顏靖家
108303013 黃鉦淳, 108303529 顏宏庭
108303051 石選立

Contents

- Current Progress
- System Architecture
- Machine params
- Result

Current Progress

- Complete C# API, OPC UA server database
- Establish Ignition interface
- Show the data on the Ignition interface successfully

System Architecture

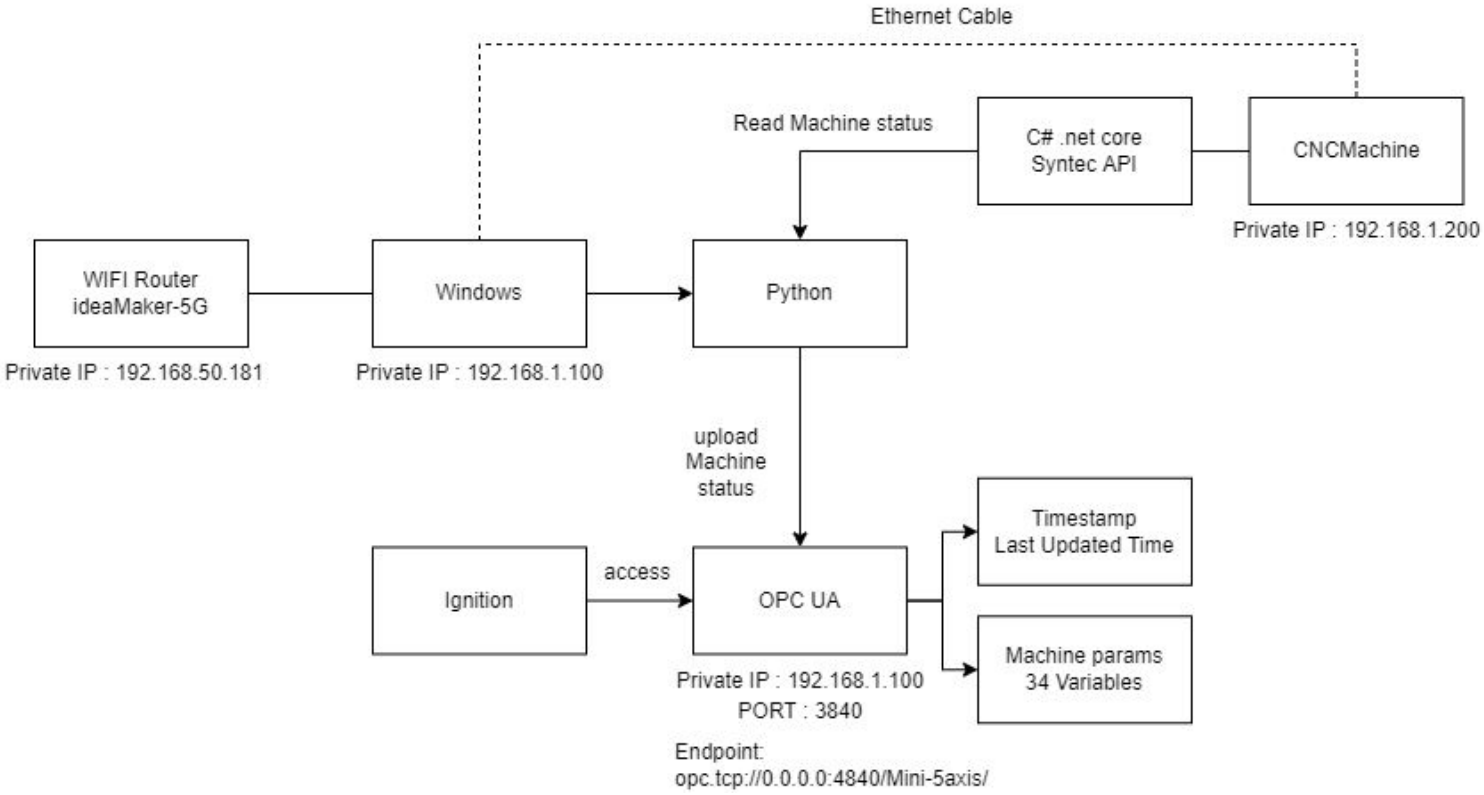

Machine params

Variable Name	Variable Type	Node Position	Variable Name	Variable Type	Node Position
_isConnected	bool	#ns=2;i=2	#READ_spindle		
_isUSBExist	bool	#ns=2;i=3	_OvFeed	double	#ns=2;i=23
_SeriesNo	string	#ns=2;i=4	_OvSpindle	double	#ns=2;i=24
_MainBoardPlatformName	string	#ns=2;i=5	_ActFeed	double	#ns=2;i=25
_READ_gcode	string	#ns=2;i=6	_ActSpindle	int64	#ns=2;i=26
#Read_Status			#READ_time		
_MainProg	string	#ns=2;i=8	_PowerOnTime	int64	#ns=2;i=28
_CurProg	int64	#ns=2;i=9	_AccCuttingTime	int64	#ns=2;i=29
_CurSeq	string	#ns=2;i=10	_CuttingCycle	int64	#ns=2;i=30
_Mode	string	#ns=2;i=11	_WorkTime	int64	#ns=2;i=31
_Status	string	#ns=2;i=12	#READ_part_count		
_Alarm	string	#ns=2;i=13	_part_count	int64	#ns=2;i=33
#Read_Poistion			_require_part_count	int64	#ns=2;i=34
_AxisName	string	#ns=2;i=15	_total_part_count	int64	#ns=2;i=35
_DecPoint	double	#ns=2;i=16	#READ_alm_current		
_Unit	string	#ns=2;i=17	_IsAlarm	bool	#ns=2;i=37
_Machcoordi	double	#ns=2;i=18	_AlmMsg	string	#ns=2;i=38
_Abscoordi	double	#ns=2;i=19	_AlmTime	string	#ns=2;i=39
_Relcoordi	double	#ns=2;i=20	#READ_nc_record		
_distance	double	#ns=2;i=21	_record	string	#ns=2;i=41
			_recordcount	int64	#ns=2;i=42

Select CNC Machine 34 params

Machine params

Variable Name	Variable Type	Node Position	Variable Name	Variable Type	Node Position
_isConnected	bool	#ns=2;i=2	#READ_spindle		
_isUSBExist	bool	#ns=2;i=3	_OvFeed	double	#ns=2;i=23
_SeriesNo	string	#ns=2;i=4	_OvSpindle	double	#ns=2;i=24
_MainBoardPlatformName	string	#ns=2;i=5	_ActFeed	double	#ns=2;i=25
_READ_gcode	string	#ns=2;i=6	_ActSpindle	int64	#ns=2;i=26
#Read_Status			#READ_time		
_MainProg	string	#ns=2;i=8	_PowerOnTime	int64	#ns=2;i=28
_CurProg	int64	#ns=2;i=9	_AccCuttingTime	int64	#ns=2;i=29
_CurSeq	string	#ns=2;i=10	_CuttingCycle	int64	#ns=2;i=30
_Mode	string	#ns=2;i=11	_WorkTime	int64	#ns=2;i=31
_Status	string	#ns=2;i=12	#READ_part_count		
_Alarm	string	#ns=2;i=13	_part_count	int64	#ns=2;i=33
#Read_Poistion			_require_part_count	int64	#ns=2;i=34
_AxisName	string	#ns=2;i=15	_total_part_count	int64	#ns=2;i=35
_DecPoint	double	#ns=2;i=16	#READ_alm_current		
_Unit	string	#ns=2;i=17	_IsAlarm	bool	#ns=2;i=37
_Machcoordi	double	#ns=2;i=18	_AlmMsg	string	#ns=2;i=38
_Abscoordi	double	#ns=2;i=19	_AlmTime	string	#ns=2;i=39
_Relcoordi	double	#ns=2;i=20	#READ_nc_record		
_distance	double	#ns=2;i=21	_record	string	#ns=2;i=41
			_recordcount	int64	#ns=2;i=42

Select CNC Machine 34 params

Result

Data Access View

#	Server	Node Id	Display Name	Value	Datatype	ource Timestamp	ierver Timestamp	Statuscode
1	FreeOpcUa Pvt...	NS2|Numeric|31	WorkTime	0	Int32	AM 08:00:00.0...	AM 08:00:00.0...	Good
2	FreeOpcUa Pvt...	NS2|Numeric|28	PowerOnTime	6750	Int32	AM 08:00:00.0...	AM 08:00:00.0...	Good
3	FreeOpcUa Pvt...	NS2|Numeric|30	CuttingCycle	0	Int32	AM 08:00:00.0...	AM 08:00:00.0...	Good
4	FreeOpcUa Pvt...	NS2|Numeric|29	AccCuttingTime	0	Int32	AM 08:00:00.0...	AM 08:00:00.0...	Good
5	FreeOpcUa Pvt...	NS2|Numeric|33	part count	0	Int32	AM 08:00:00.0...	AM 08:00:00.0...	Good
6	FreeOpcUa Pvt...	NS2|Numeric|25	ActFeed	0	Float	AM 08:00:00.0...	AM 08:00:00.0...	Good
7	FreeOpcUa Pvt...	NS2|Numeric|19	Abs coordinati...	{92.652,46.185,-57.186,24.961,350.112}	Float	AM 08:00:00.0...	AM 08:00:00.0...	Good
8	FreeOpcUa Pvt...	NS2|Numeric|20	Rel coordination	{166.213,-29.047,-104.12,24.961,350.112}	Float	AM 08:00:00.0...	AM 08:00:00.0...	Good
9	FreeOpcUa Pvt...	NS2|Numeric|21	distance	{0,0,0,0,0}	Float	AM 08:00:00.0...	AM 08:00:00.0...	Good

(1) UaExpert

(2) Mini 5-axis

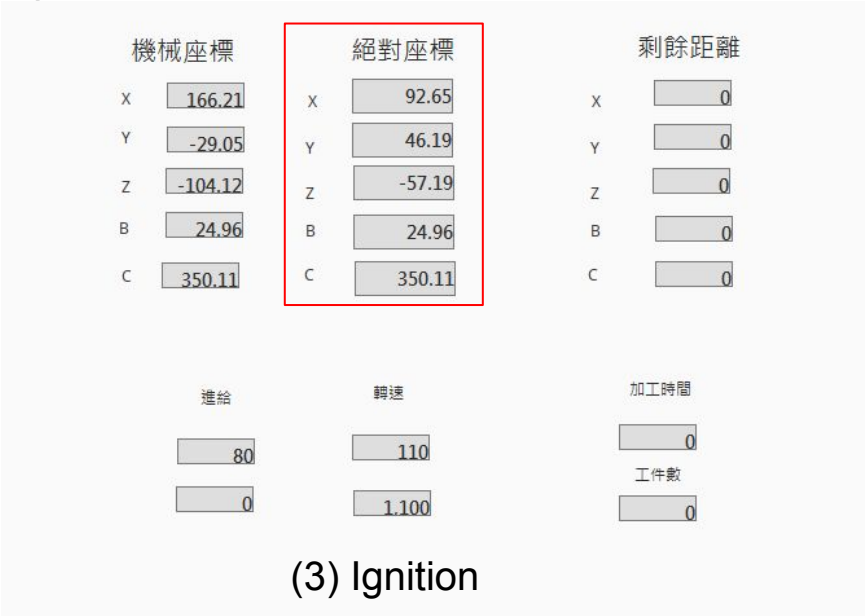

(3) Ignition

Thanks for listening!