Manufacturing Networks Techonology

Data integration of Mini 5-axis CNC System

12/28 (Wed.)

Teammate

108303503 楊佩錡, 108303045 顏靖家
108303013 黃鉦淳, 108303529 顏宏庭
108303051 石選立

Contents

- Machine Intro
- System Architecture
- Pseudo Code
- Machine params
- Result
- Prospect

Machine Intro

產品規格

Mini 5- Axis CNC	CNC 複合加工機
機械尺寸(深*寬*高)	75*70*172cm
主軸/ 工作台	
最高轉速	2400rpm
最大功率	750W
工作台直徑	φ130mm
進給軸	
行程	X:200mm ; Y:150mm; Z:180mm ; B: (+) 110。~ (-30)。 ; C: 360。
馬達解析度	17 BIT/ REV
重現精度	X/Y/Z: (+) (-)2μm B/C: (+) (-) 10/ARC SEC

https://www.lihwoei.com.tw/mini5-axis-cnc-tw

System Architecture

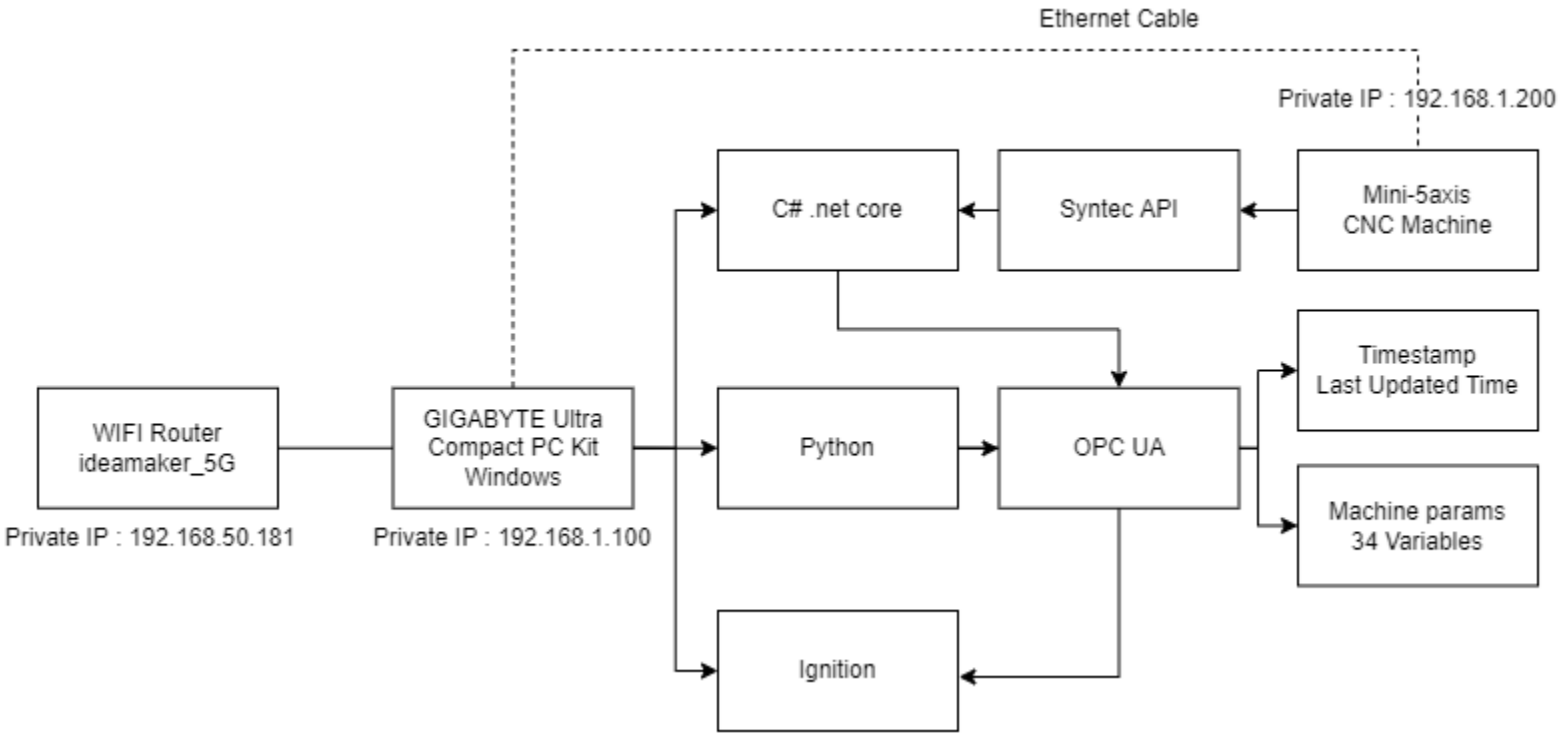

Pseudo Code

Python OPC UA

```
opcua = OPCUA()     # Create OPC UA Server Instance
opcua.set_endpoint("opc.tcp://0.0.0.0:4840/Mini-5axis/") # Set OPC UA Endpoint
opcua.add_nodes()   # Add OPC UA Server nodes
opcua.start()       # Start OPC UA Server
while True:
    time.sleep(1)   # Running OPC UA Server
```

Pseudo Code

C# .NET Core

```
OpcClient client = new OpcClient("opc.tcp://127.0.0.1:4840/Mini-5axis"); # Create OPC UA Instance
client.Connect();                                                        # Connect to OPC UA Server
SyntecRemoteCNC syntecRemoteCNC = new SyntecRemoteCNC("192.168.1.200");  # Create API Instance
while (true){
  ReadValueFromMachine(syntecRemoteCNC, data); # Read value from Machine
  UpdateValue2OPCUA(client, data);             # Update value to OPC UA Server
  Thread.Sleep(500);
}
syntecRemoteCNC.Close();                       # Close connection between local and API
client.Disconnect();                           # Close connection between OPC Server and Client
```

Machine params

- CNC Machine 34 params
- Last Updated Timestamp

Variable	Data Type	Node	Variable	Data Type	Node
_isConnected	bool	#ns=2;i=2	#READ_spindle		
_isUSBExist	bool	#ns=2;i=3	_OvFeed	double	#ns=2;i=23
_SeriesNo	string	#ns=2;i=4	_OvSpindle	double	#ns=2;i=24
_MainBoardPlatformName	string	#ns=2;i=5	_ActFeed	double	#ns=2;i=25
_READ_gcode	string	#ns=2;i=6	_ActSpindle	int64	#ns=2;i=26
#Read_Status			#READ_time		
_MainProg	string	#ns=2;i=8	_PowerOnTime	int64	#ns=2;i=28
_CurProg	int64	#ns=2;i=9	_AccCuttingTime	int64	#ns=2;i=29
_CurSeq	string	#ns=2;i=10	_CuttingCycle	int64	#ns=2;i=30
_Mode	string	#ns=2;i=11	_WorkTime	int64	#ns=2;i=31
_Status	string	#ns=2;i=12	#READ_part_count		
_Alarm	string	#ns=2;i=13	_part_count	int64	#ns=2;i=33
#Read_Poistion			_require_part_count	int64	#ns=2;i=34
_AxisName	string	#ns=2;i=15	_total_part_count	int64	#ns=2;i=35
_DecPoint	double	#ns=2;i=16	#READ_alm_current		
_Unit	string	#ns=2;i=17	_IsAlarm	bool	#ns=2;i=37
_Machcoordi	double	#ns=2;i=18	_AlmMsg	string	#ns=2;i=38
_Abscoordi	double	#ns=2;i=19	_AlmTime	string	#ns=2;i=39
_Relcoordi	double	#ns=2;i=20	#READ_nc_record		
_distance	double	#ns=2;i=21	_record	string	#ns=2;i=41
			_recordcount	int64	#ns=2;i=42
			timestamp	string	#ns=2;i=43

Final Result

- Complete C# API, OPC UA server database
- Establish Ignition user interface
- Show the data on the Ignition interface successfully

Result

Data Access View

#	Server	Node Id	Display Name	Value	Datatype	ource Timestamp	ierver Timestamp	Statuscode
1	FreeOpcUa Pvt...	NS2|Numeric|31	WorkTime	0	Int32	AM 08:00:00.0...	AM 08:00:00.0...	Good
2	FreeOpcUa Pvt...	NS2|Numeric|28	PowerOnTime	6750	Int32	AM 08:00:00.0...	AM 08:00:00.0...	Good
3	FreeOpcUa Pvt...	NS2|Numeric|30	CuttingCycle	0	Int32	AM 08:00:00.0...	AM 08:00:00.0...	Good
4	FreeOpcUa Pvt...	NS2|Numeric|29	AccCuttingTime	0	Int32	AM 08:00:00.0...	AM 08:00:00.0...	Good
5	FreeOpcUa Pvt...	NS2|Numeric|33	part_count	0	Int32	AM 08:00:00.0...	AM 08:00:00.0...	Good
6	FreeOpcUa Pvt...	NS2|Numeric|25	ActFeed	0	Float	AM 08:00:00.0...	AM 08:00:00.0...	Good
7	FreeOpcUa Pvt...	NS2|Numeric|19	Abs coordinati...	{92.652,46.185,-57.186,24.961,350.112}	Float	AM 08:00:00.0...	AM 08:00:00.0...	Good
8	FreeOpcUa Pvt...	NS2|Numeric|20	Rel coordination	{166.213,-29.047,-104.12,24.961,350.112}	Float	AM 08:00:00.0...	AM 08:00:00.0...	Good
9	FreeOpcUa Pvt...	NS2|Numeric|21	distance	{0,0,0,0,0}	Float	AM 08:00:00.0...	AM 08:00:00.0...	Good

(1) UaExpert

(2) Mini 5-axis

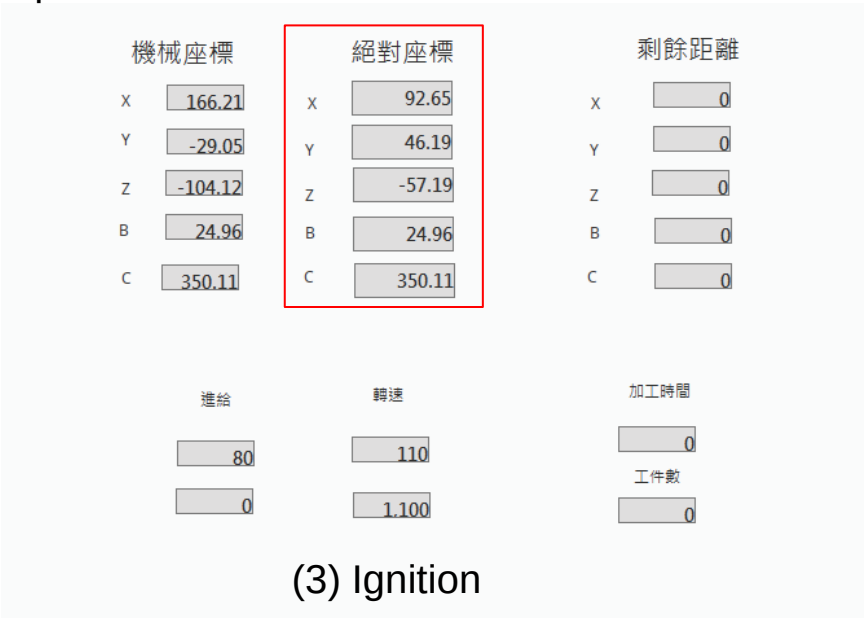

(3) Ignition

Thanks for listening!