VLSI Layout HW1

ID:312611096

Name:黃鉦淳

Date:2023/11/27

Tool: Virtuoso

Process: T18

Abstract

1-1 One-Stick Inverter

1-2 Folded Inverter

1-3 Two-Stick Inverter

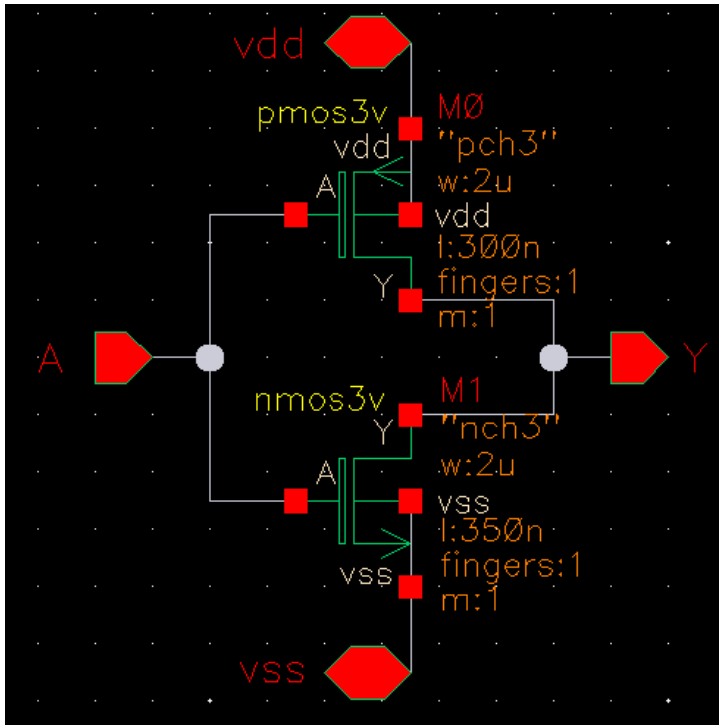

Schematic

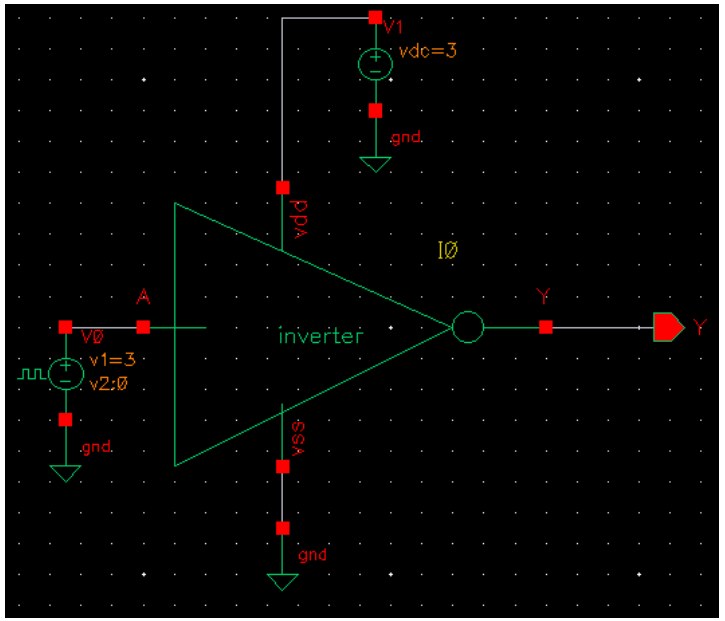

Validation

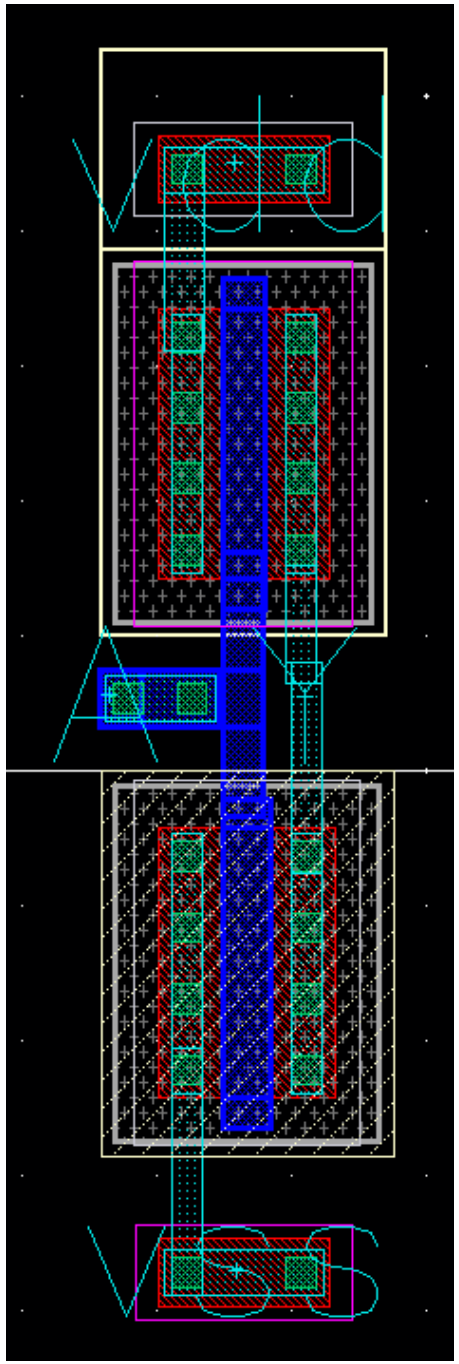

Layout

1-1 One-Stick Inverter

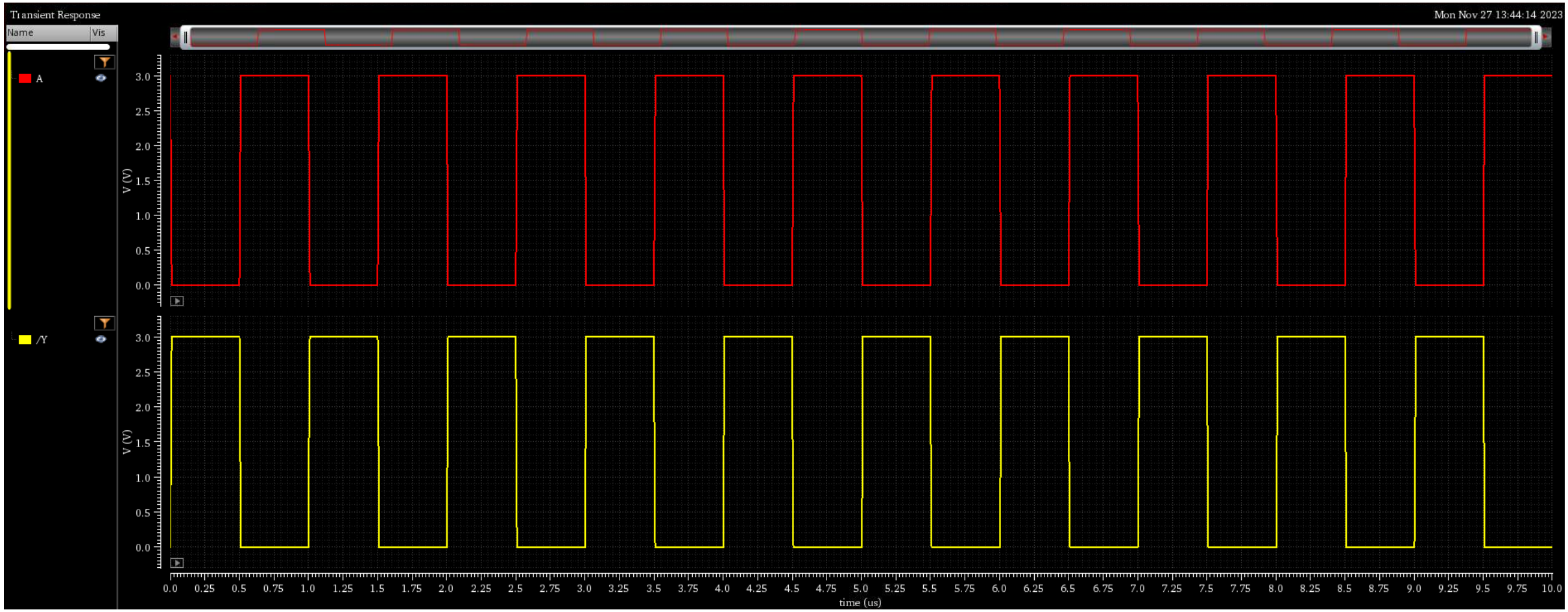

Simulation

1-1 One-Stick Inverter

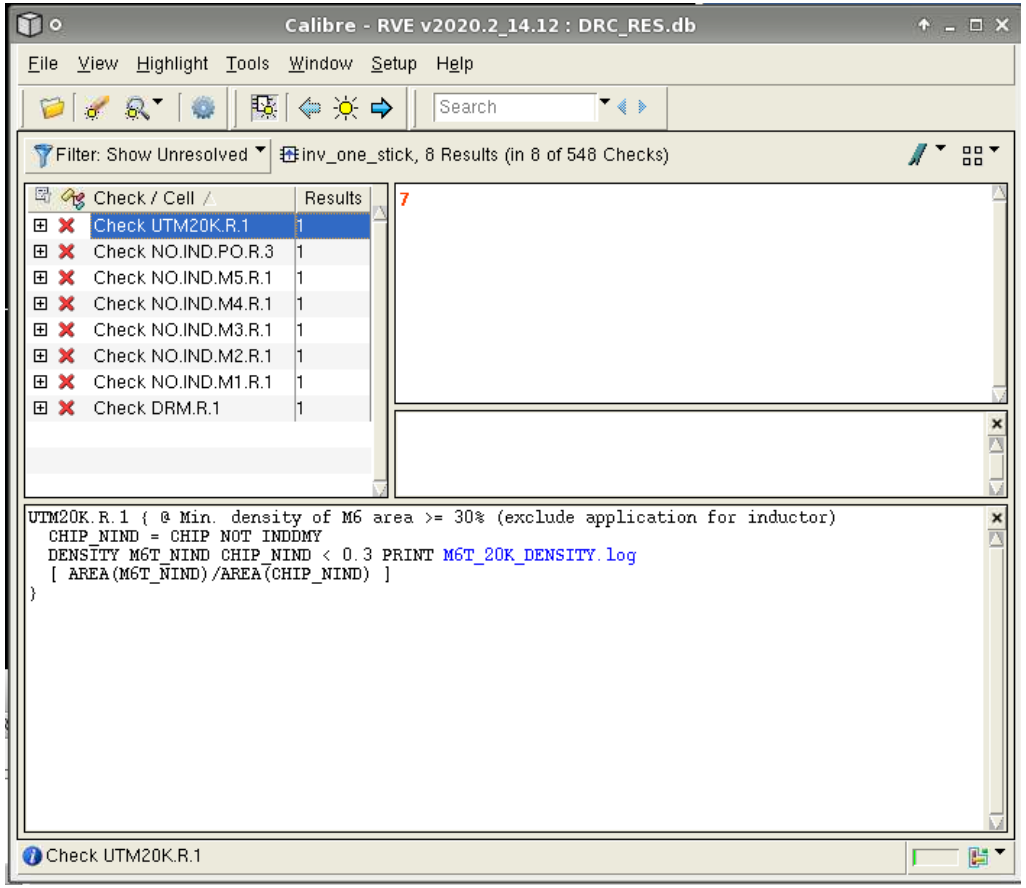

DRC

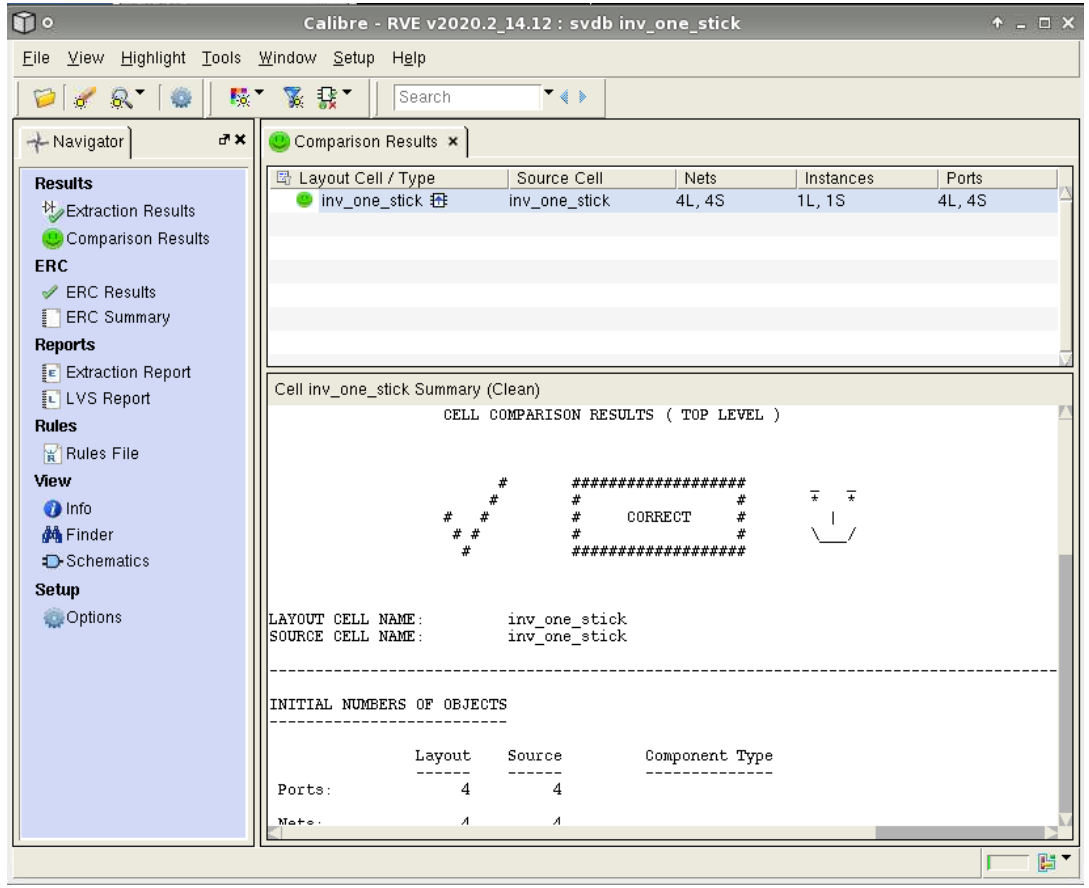

LVS

1-1 One-Stick Inverter

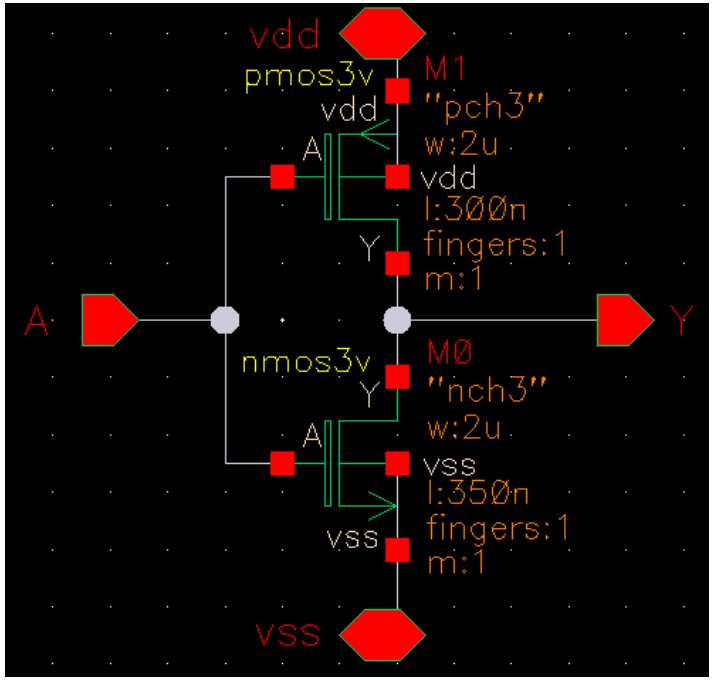

Schematic

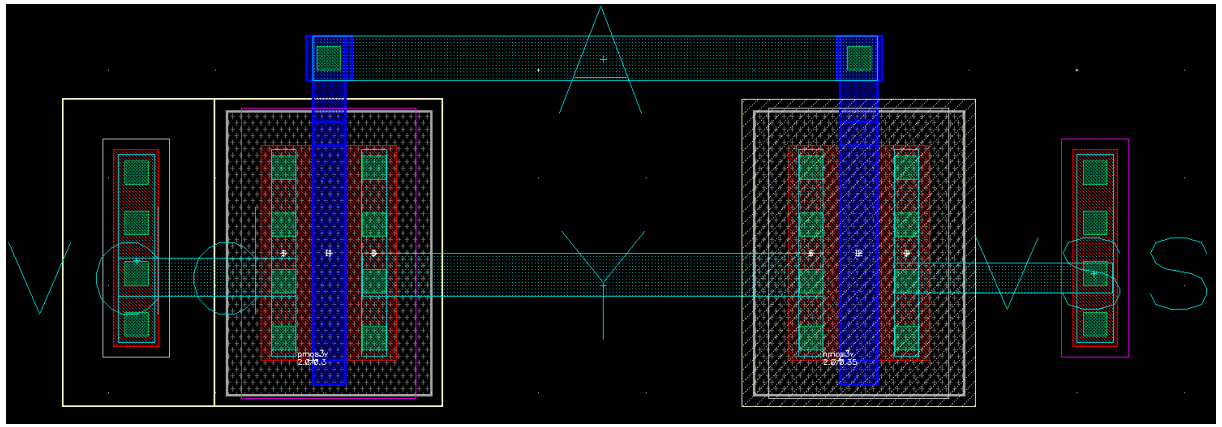

Layout

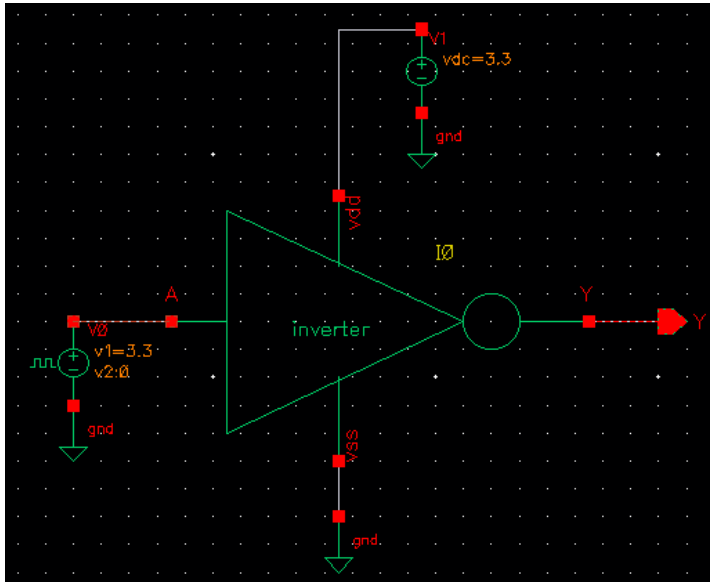

Validation

1-2 Folded Inverter

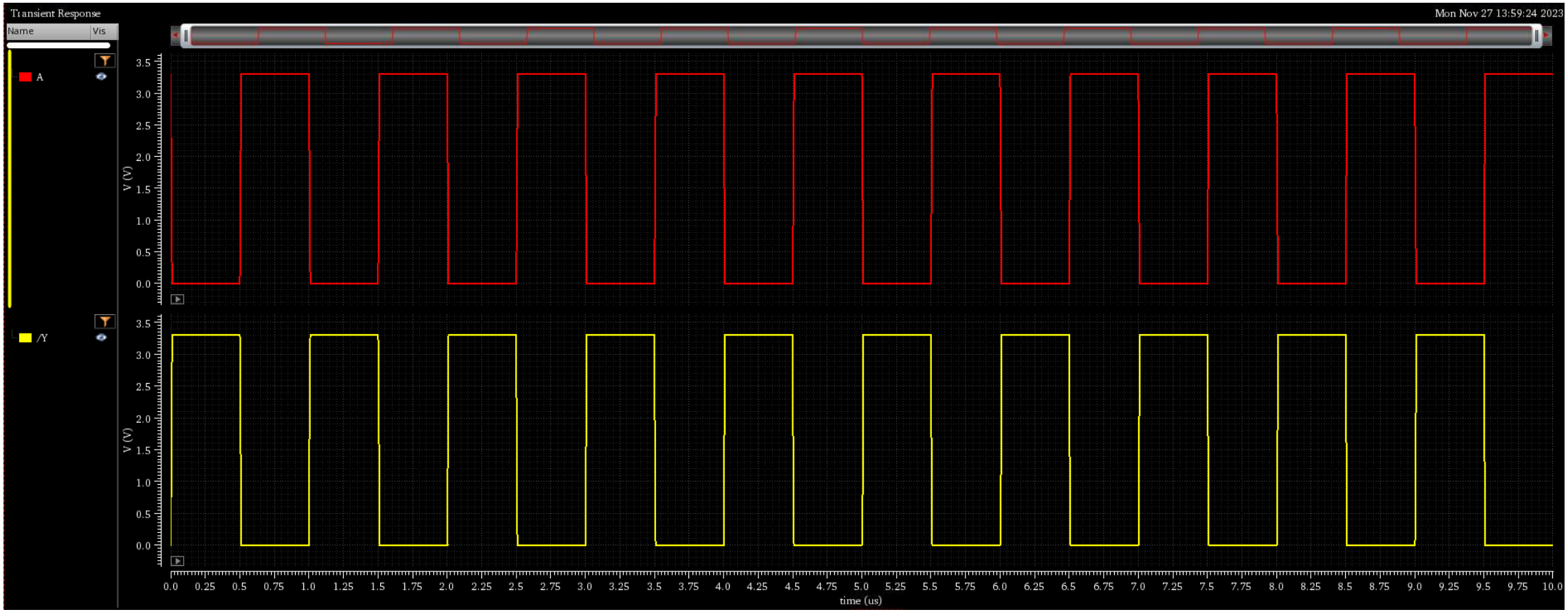

Simulation

1-2 Folded Inverter

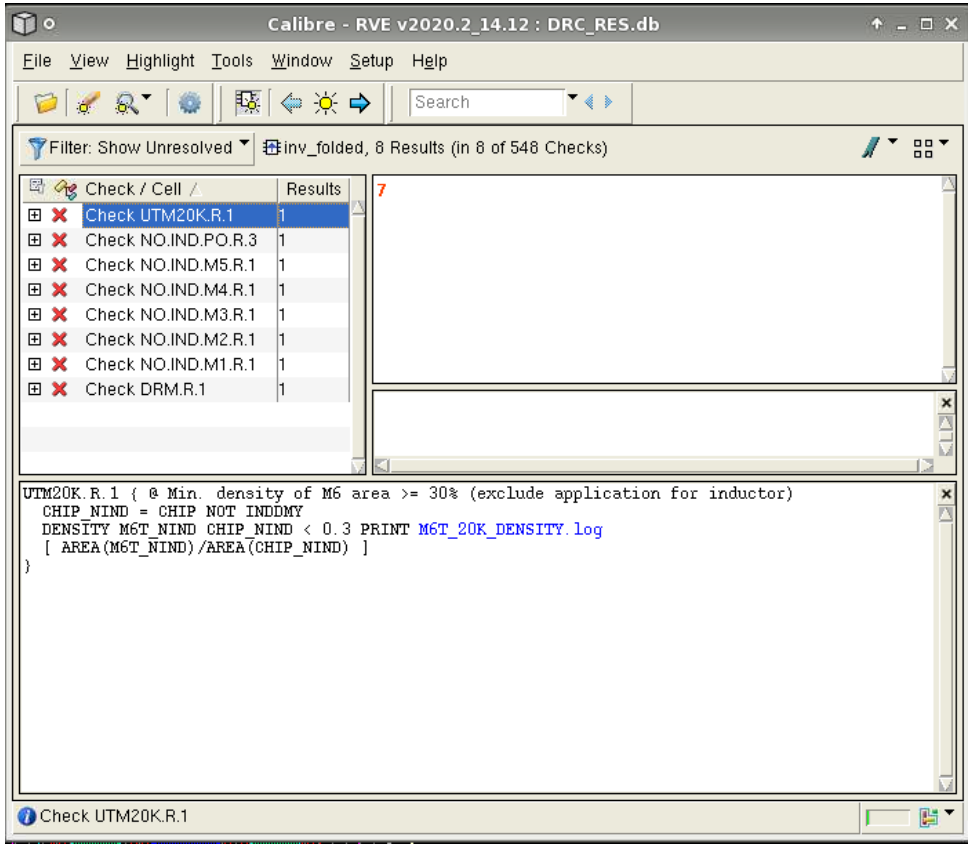

DRC

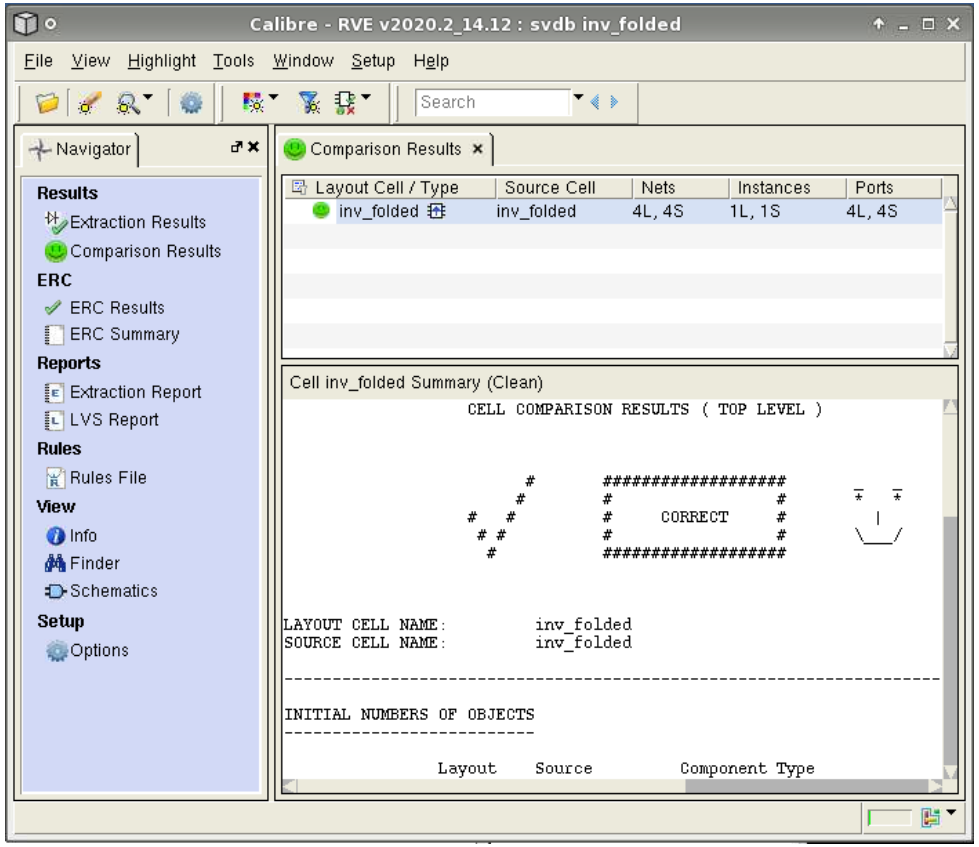

LVS

1-2 Folded Inverter

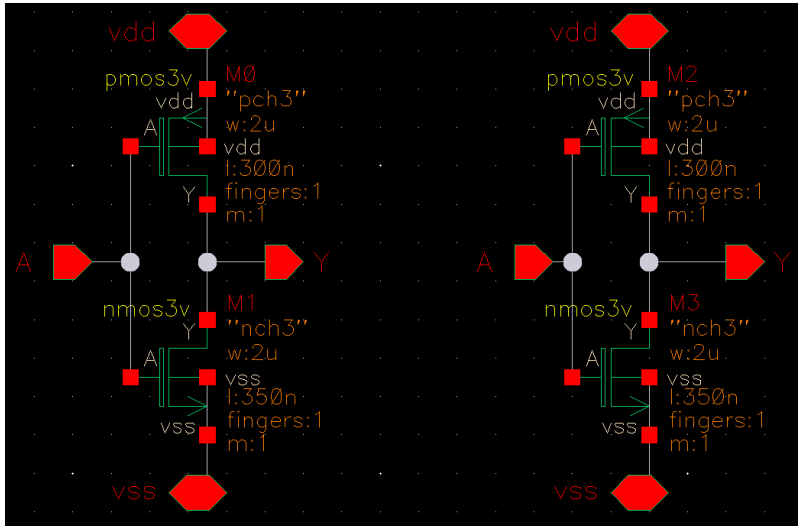

Schematic

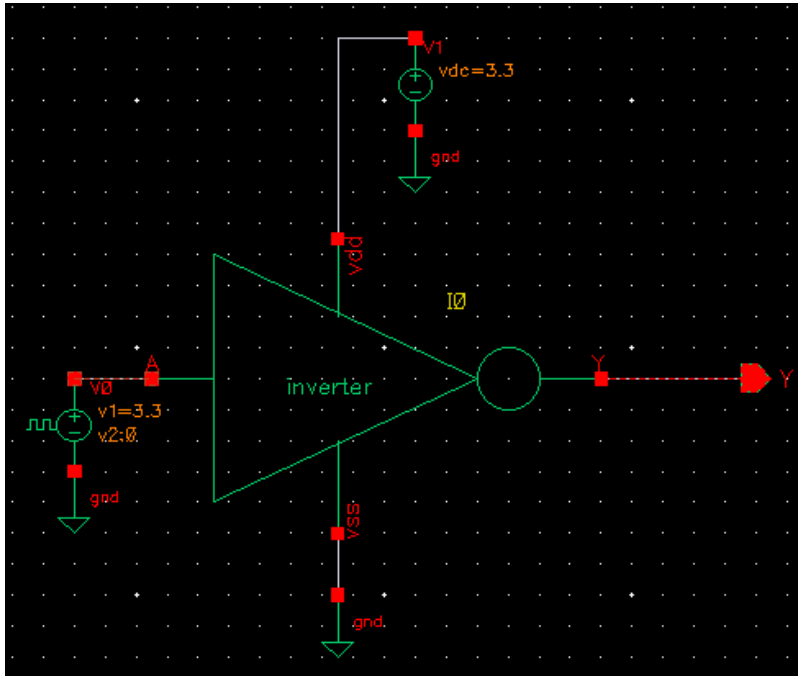

Validation

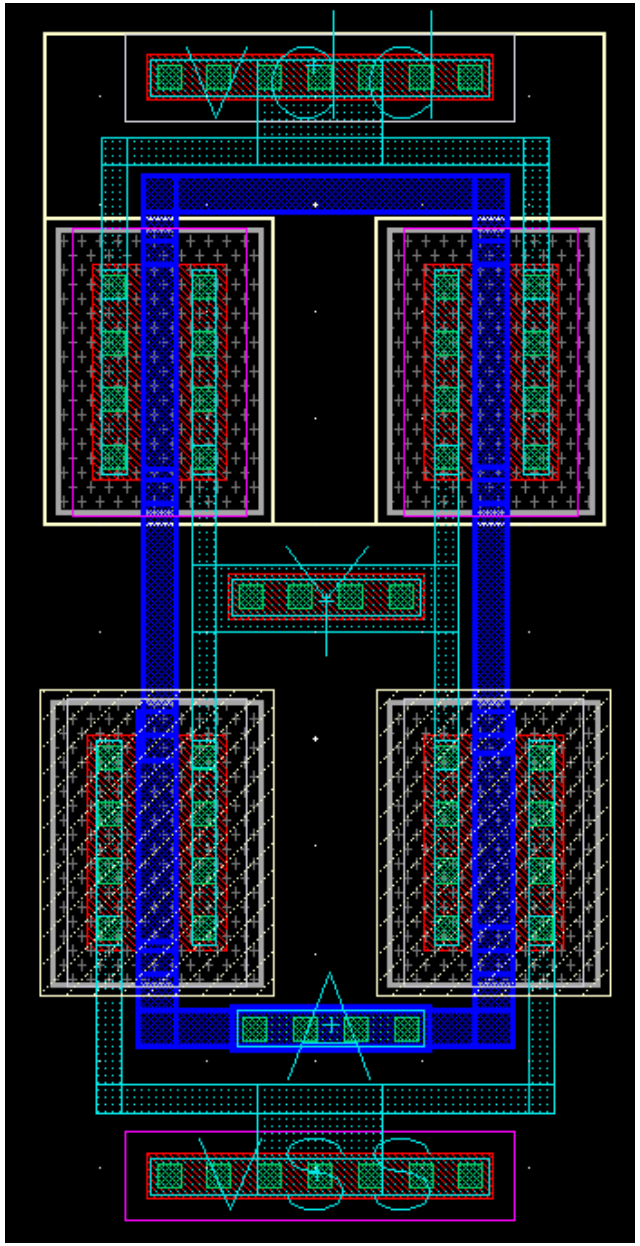

Layout

1-3 Two-Stick Inverter

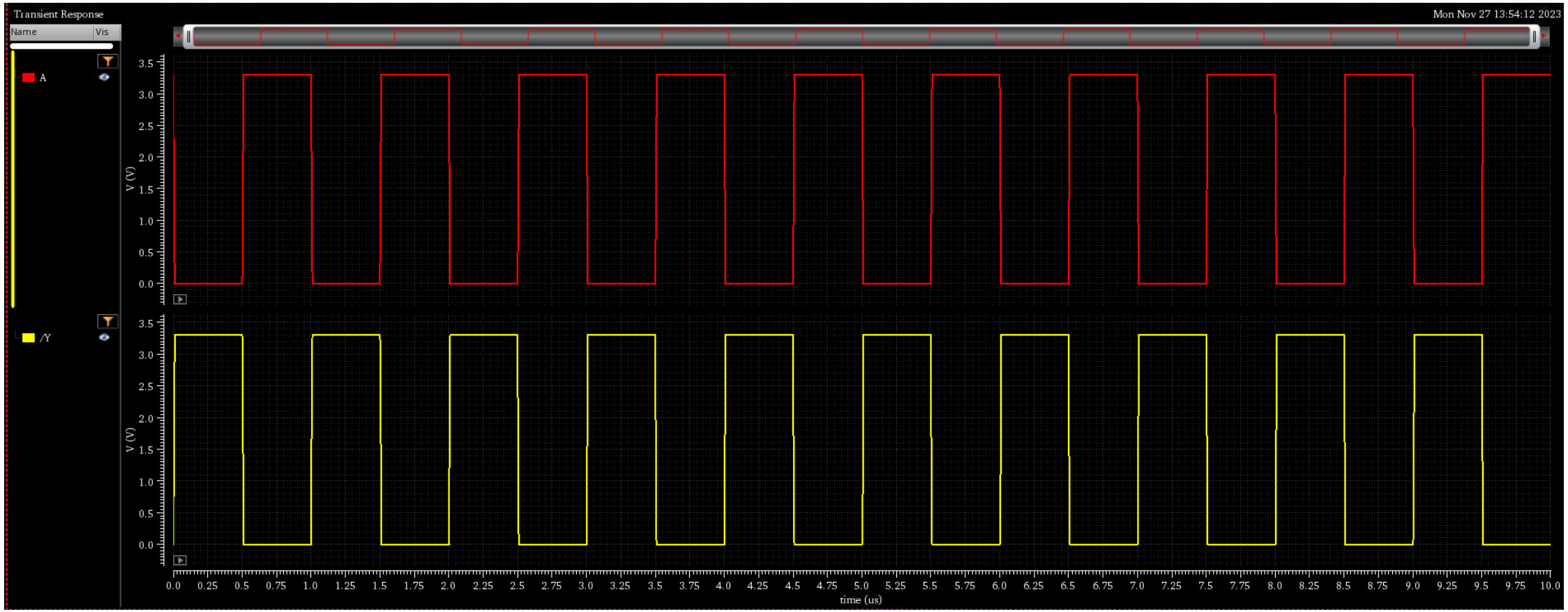

Simulation

1-3 Two-Stick Inverter

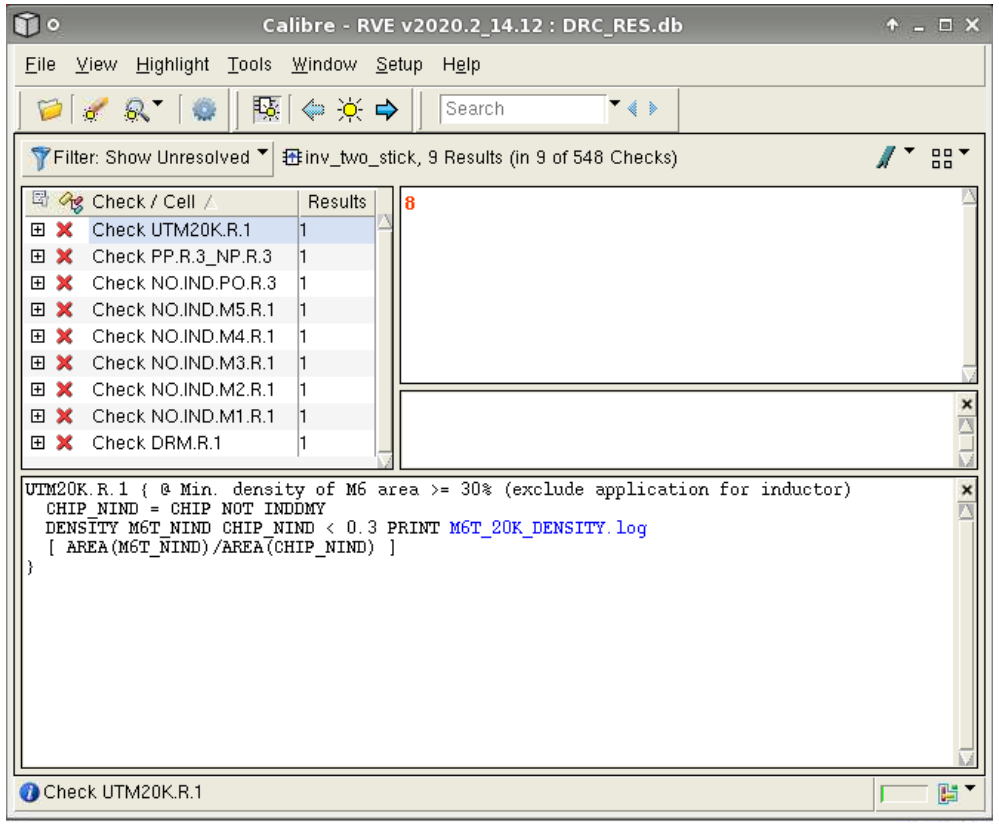

DRC

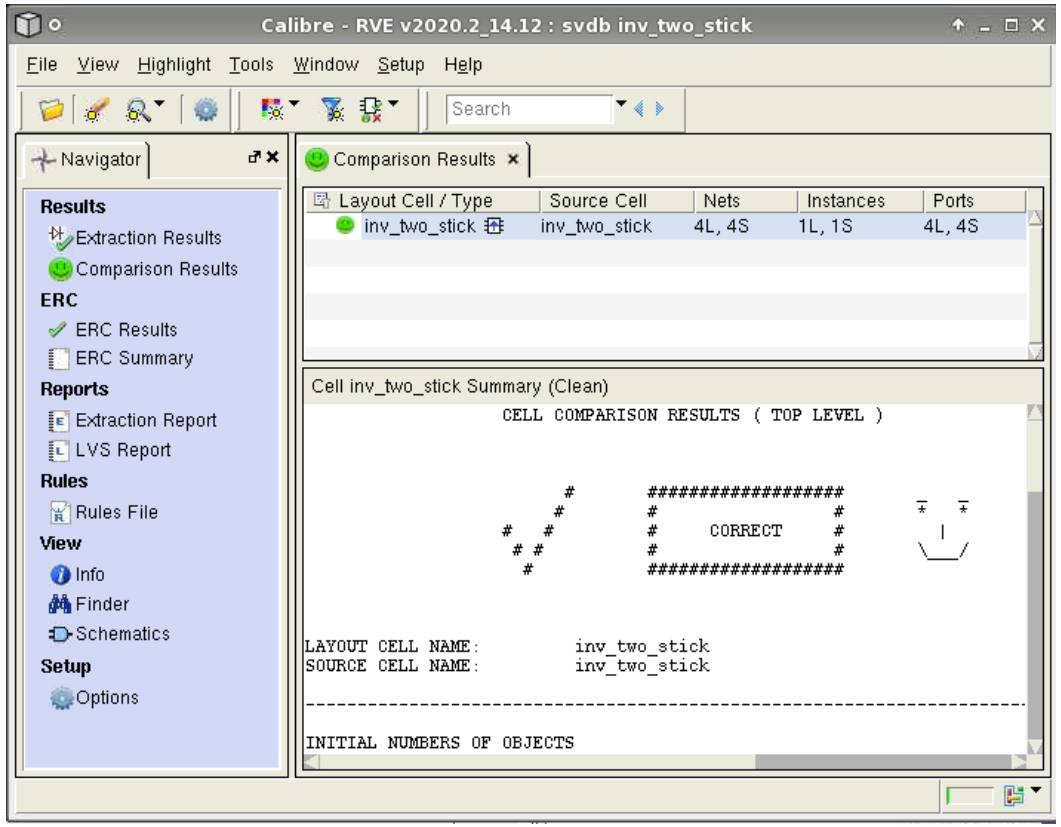

LVS

1-3 Two-Stick Inverter