VLSI Layout HW2

ID:312611096

Name:黃鉦淳

Date:2023/11/29

Tool: Virtuoso

Process: T18

Abstract

2-1 D-latch

2-Bonus SRAM(6T)

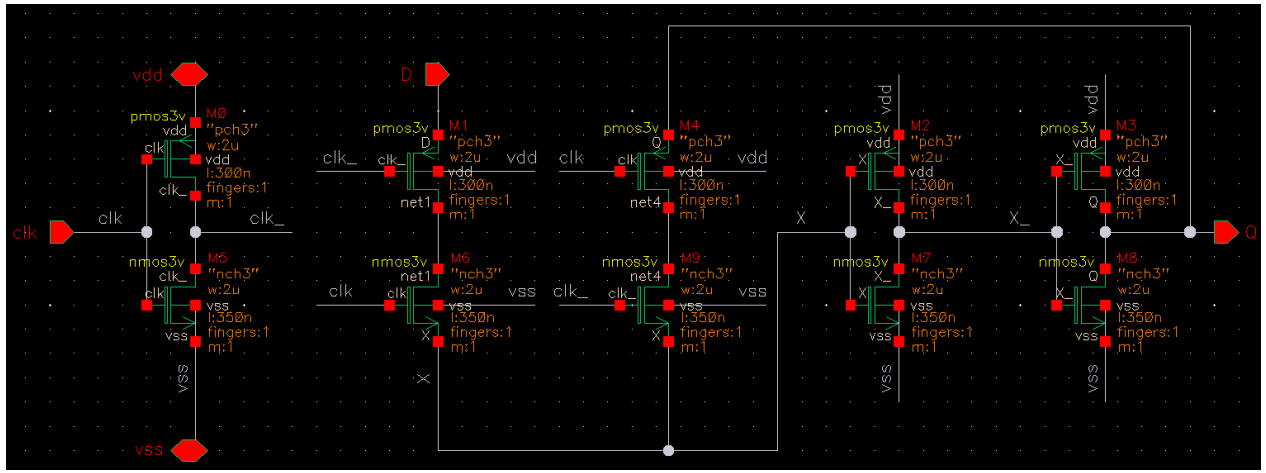

Schematic

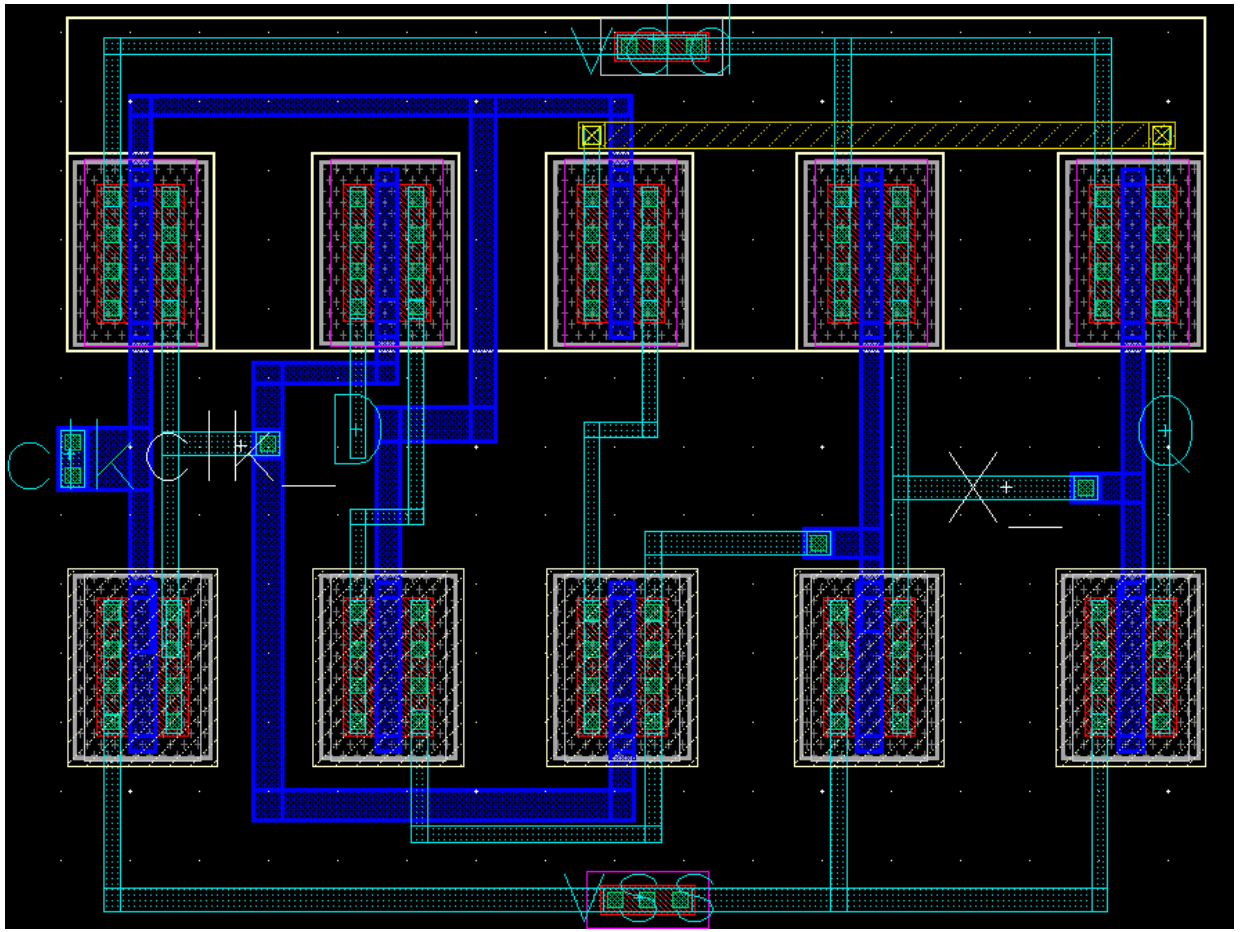

Layout

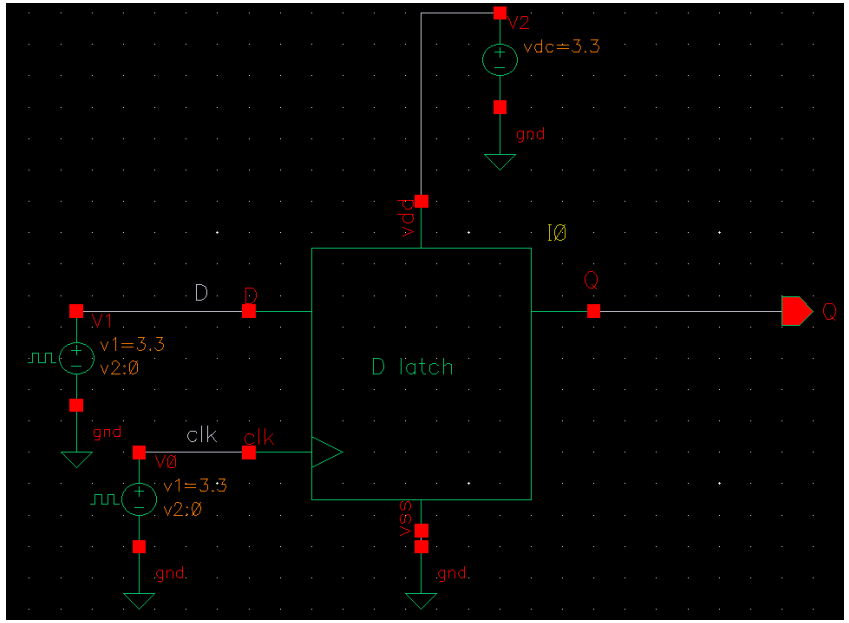

Validation

2-1 D-latch

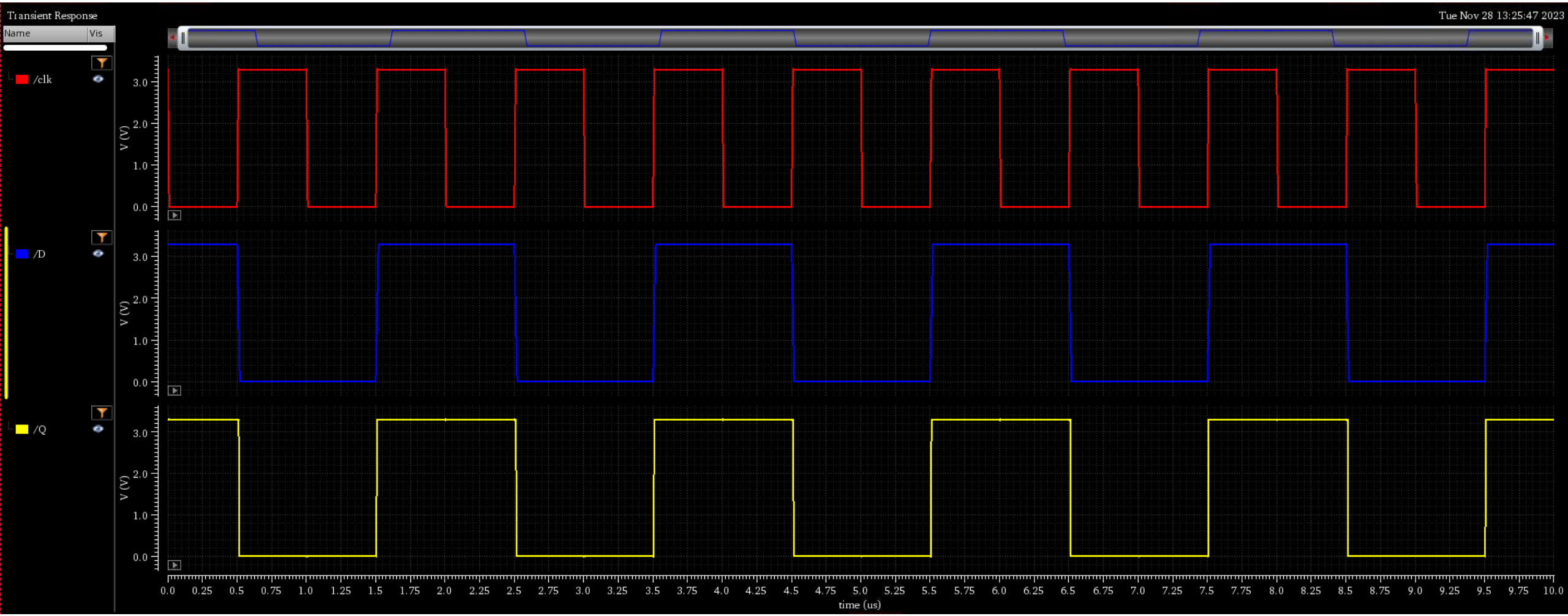

Simulation

clk=1, Q=D
clk=0, Q latch

2-1 D-latch

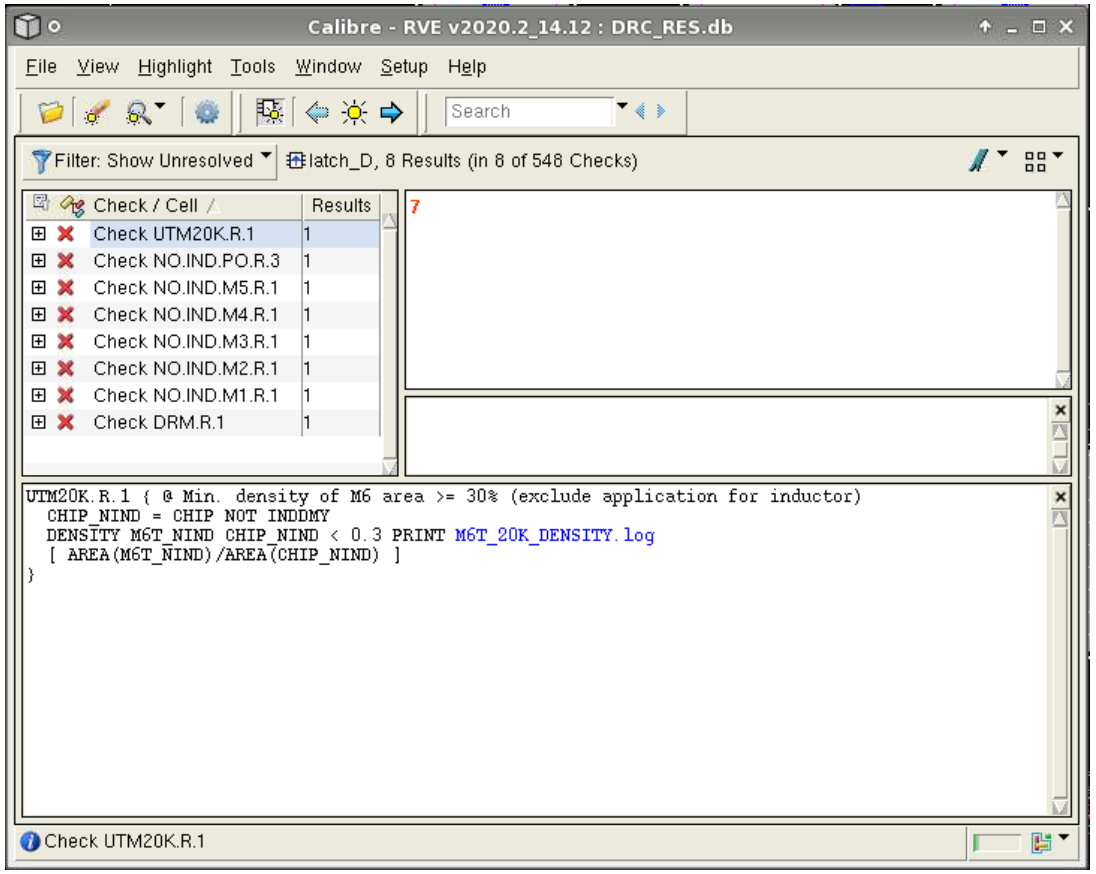

DRC

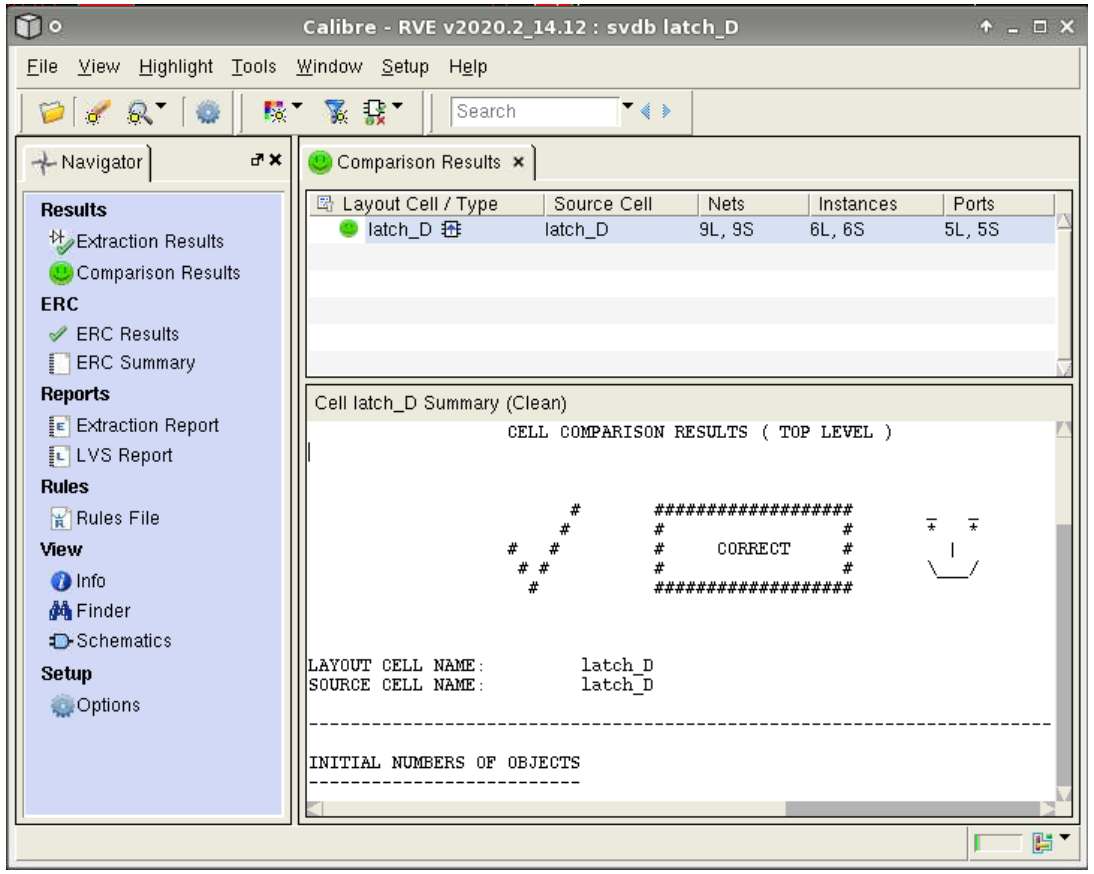

LVS

2-1 D-latch

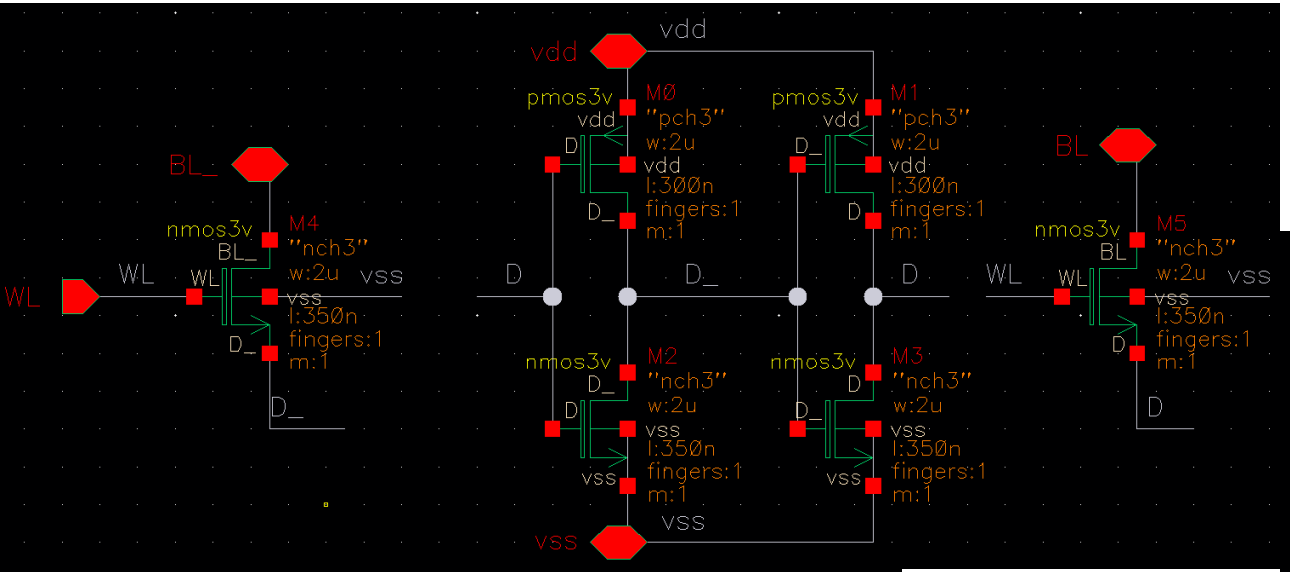

Schematic

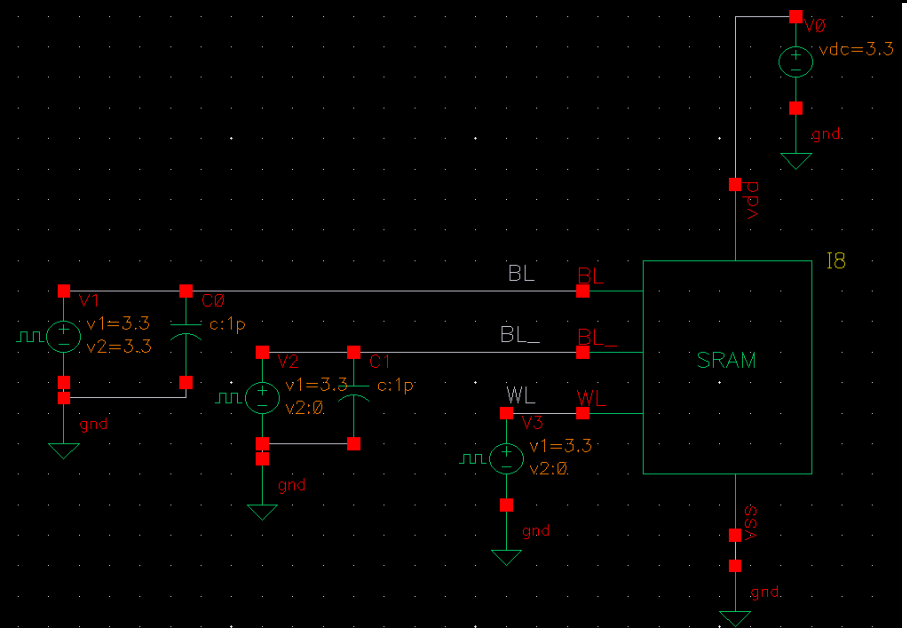

Validation

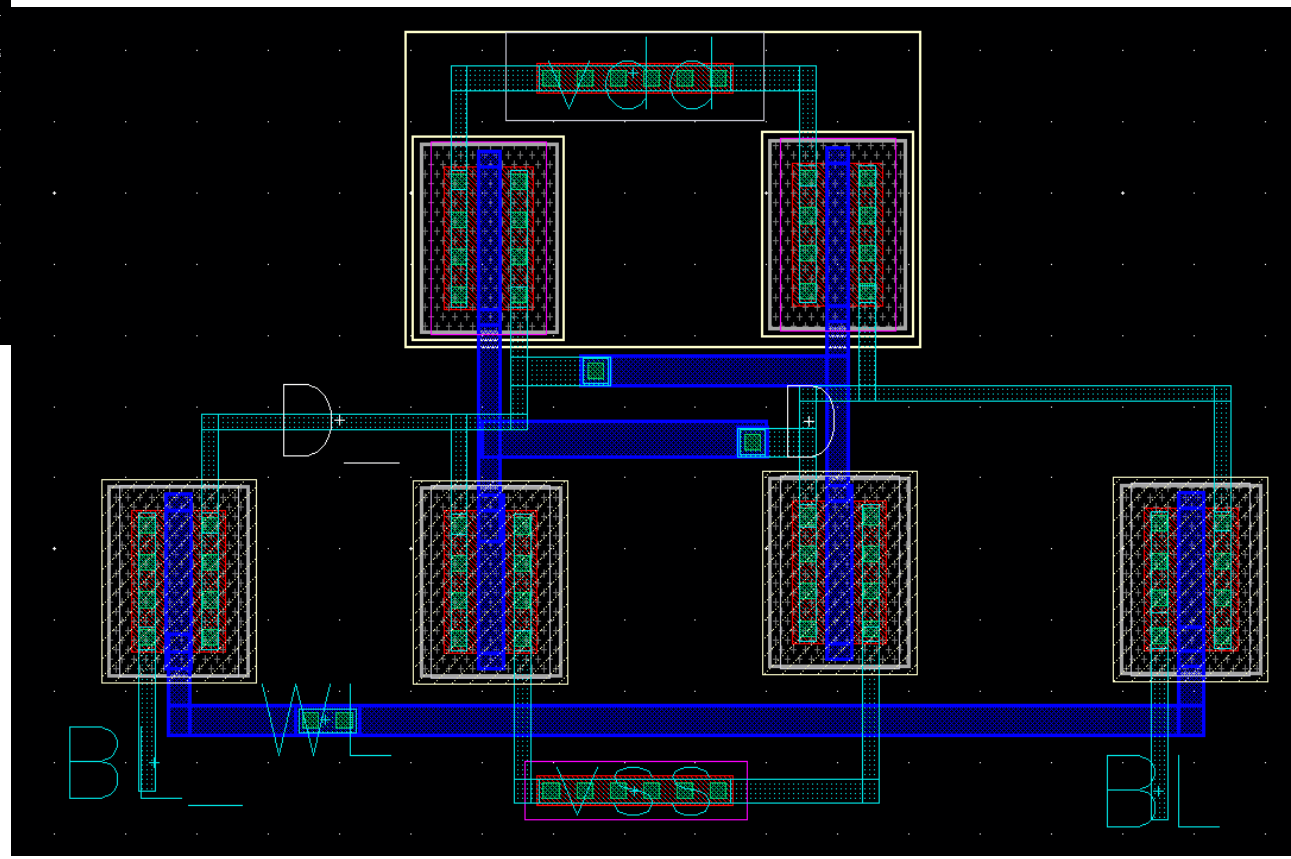

Layout

2-Bonus SRAM

Simulation

WL=1, SRAM can R/W

WL=0, SRAM latch

WL=1, BL=1, BL_=0, Write Data=1

WL=1, BL=0, BL_=1, Write Data=0

WL=1, BL=1, BL_=1, Read Data from sensing BL/BL_

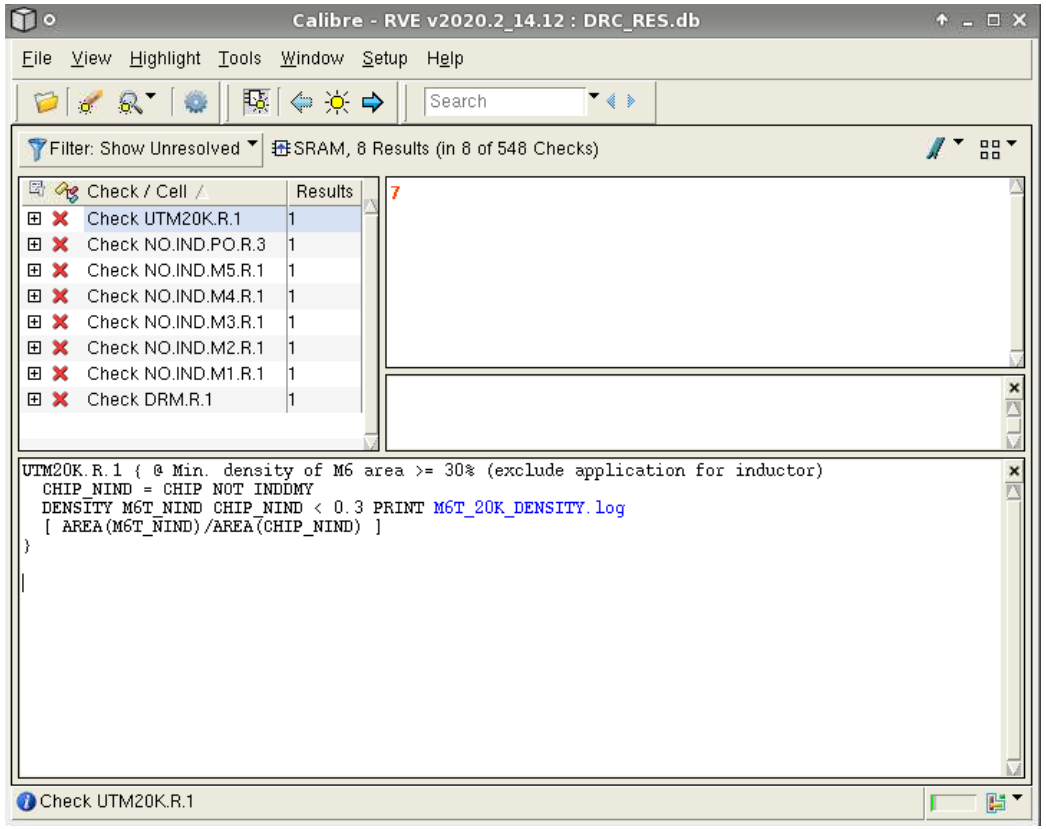

DRC

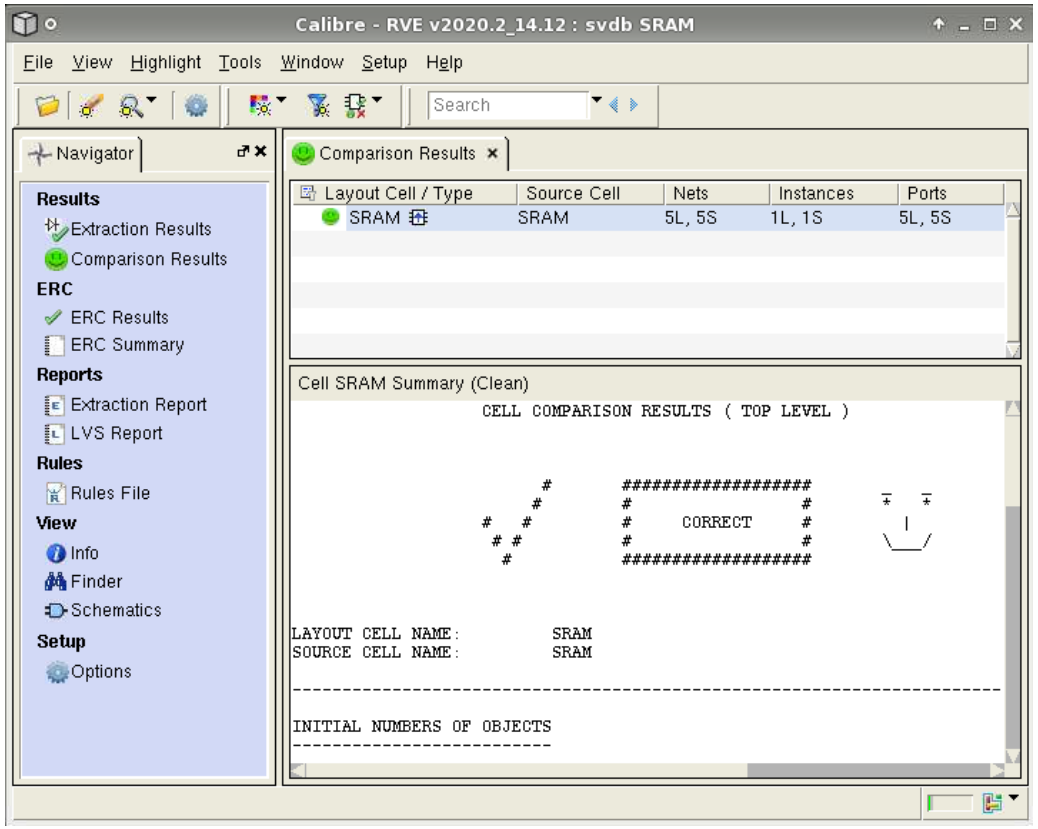

LVS

2-Bonus SRAM