VLSI Layout HW3

ID:312611096

Name:黃鉦淳

Date:2023/11/30

Tool: Virtuoso

Process: T18

Abstract

3-1 2-stage op

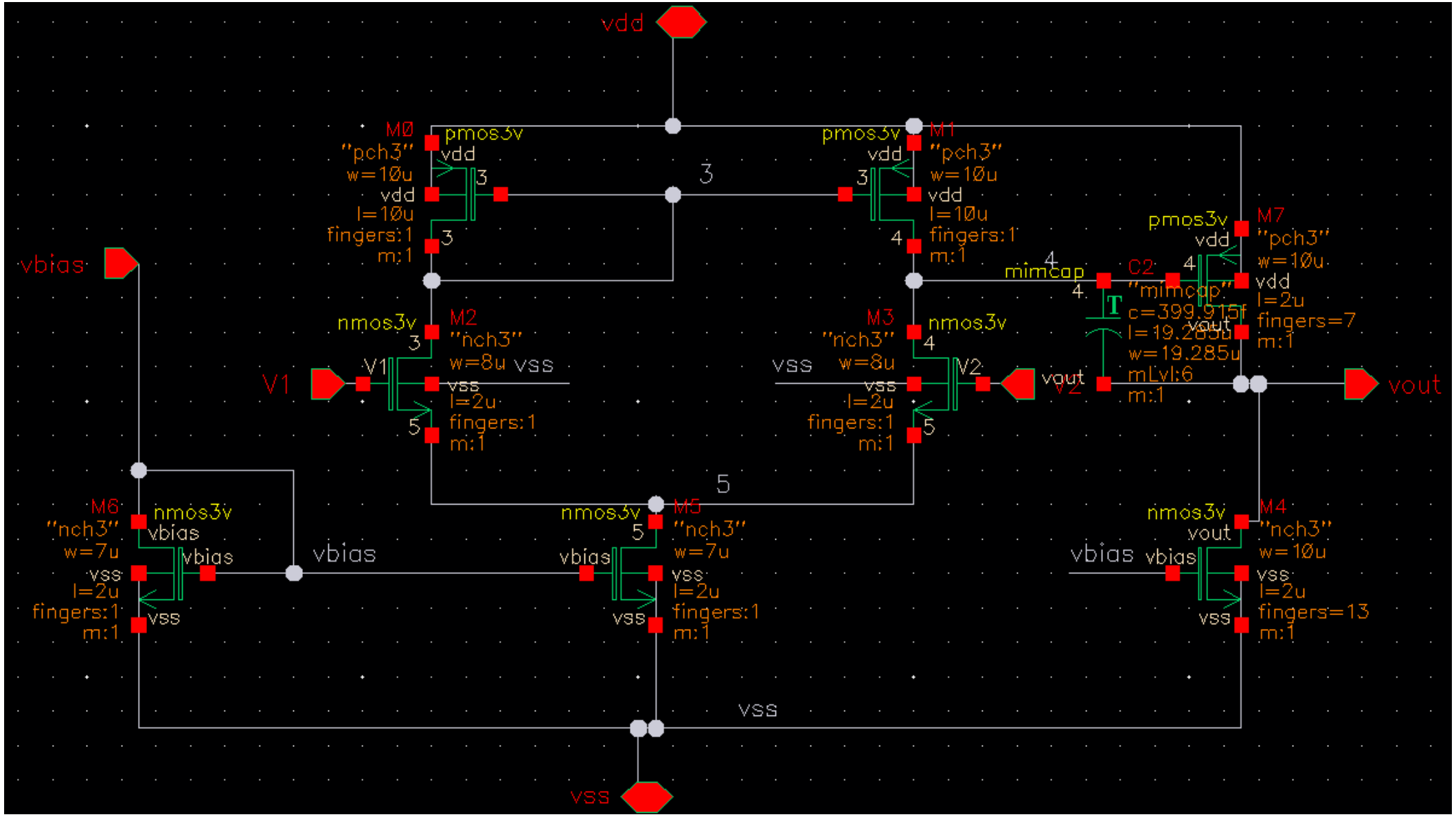

Schematic

3-1 2-stage op

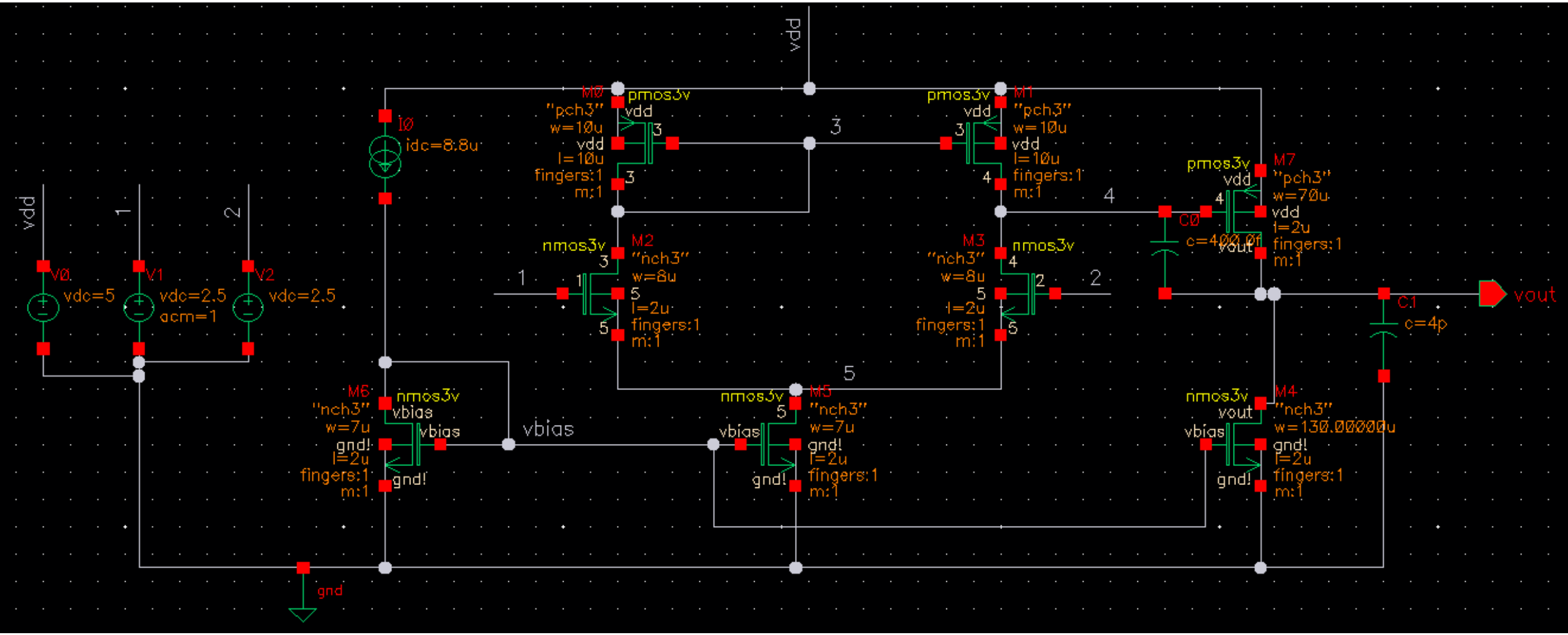

Schematic(AC)

3-1 2-stage op

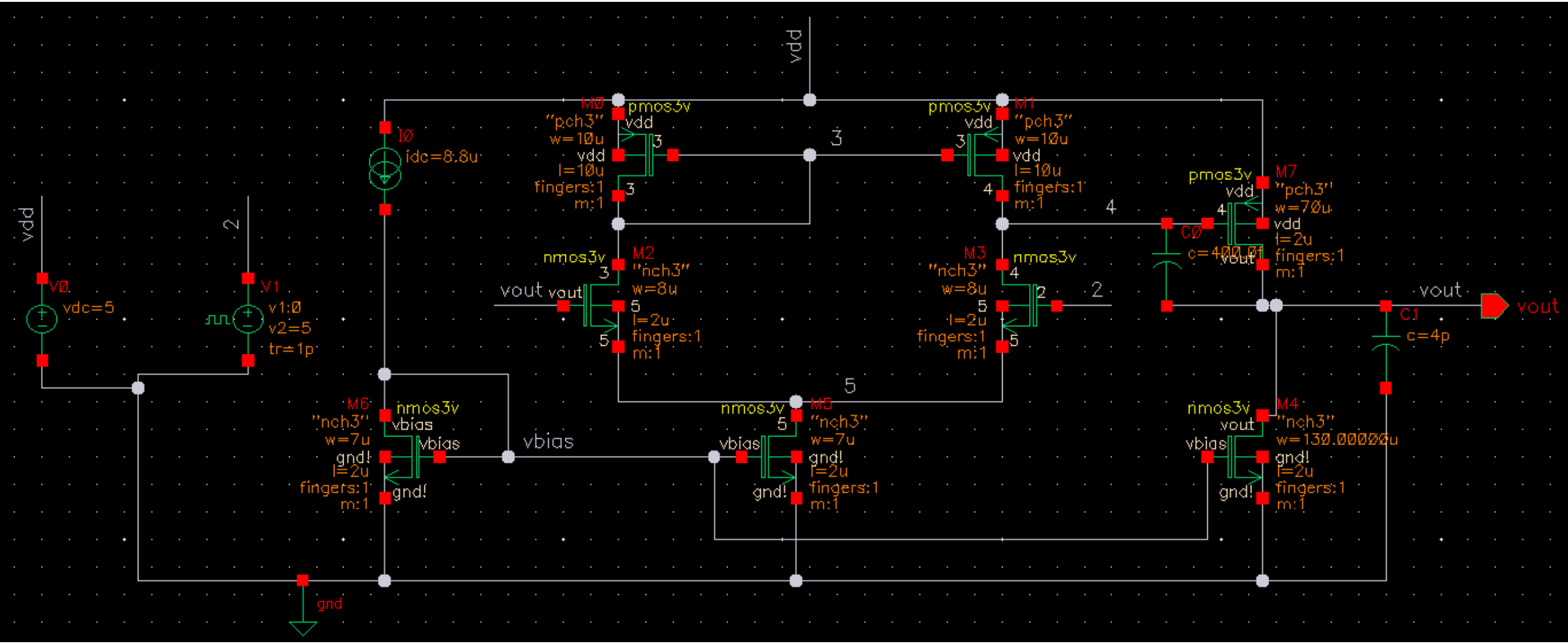

Schematic(transient)

3-1 2-stage op

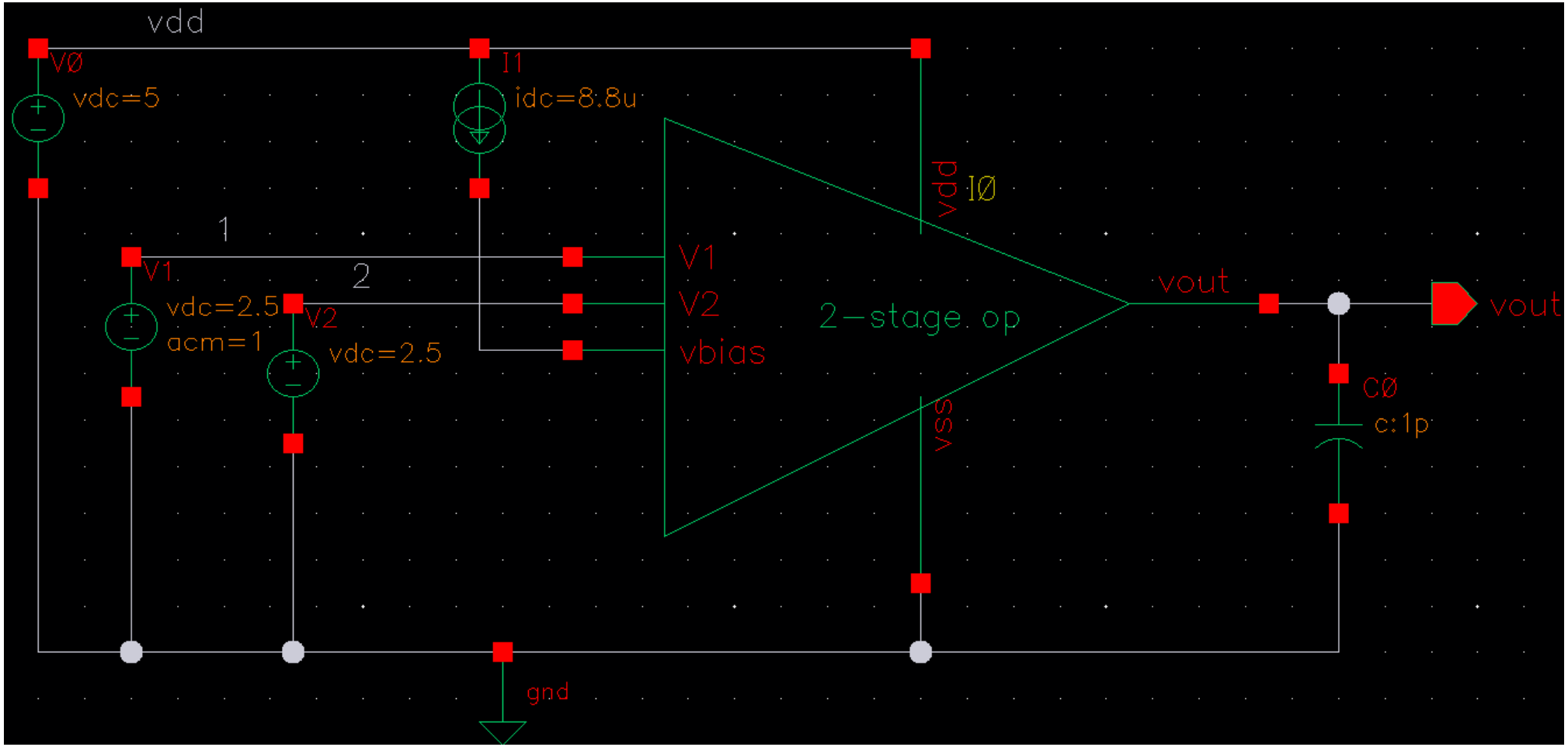

Validation

3-1 2-stage op

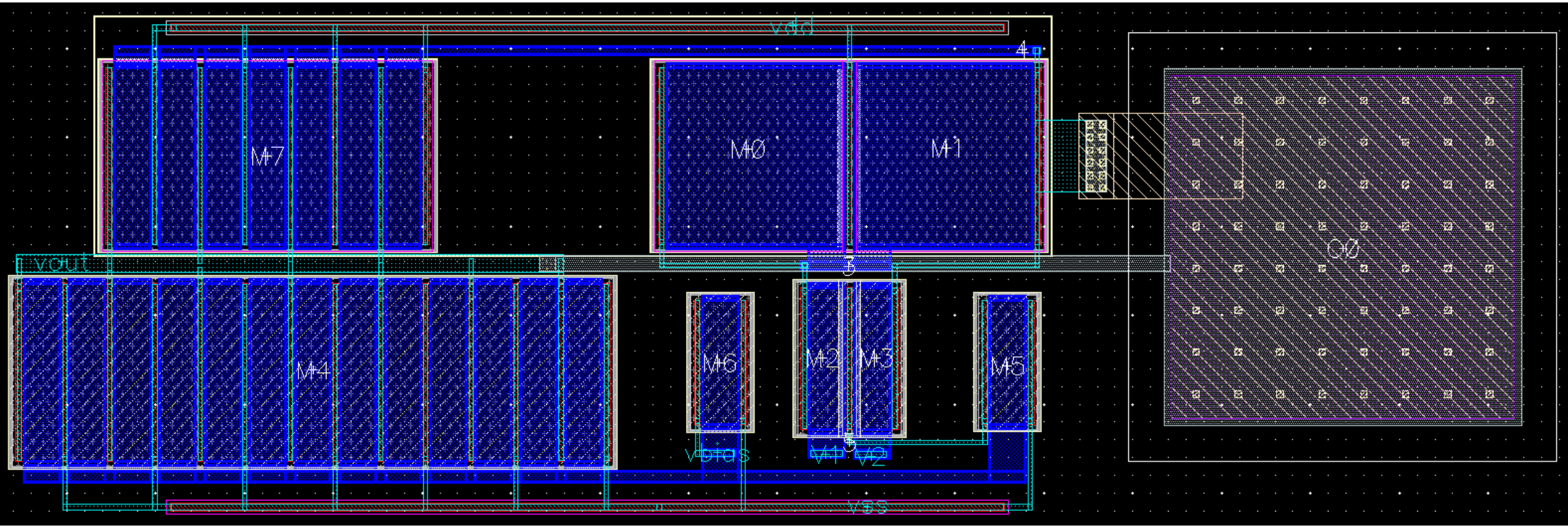

Layout

3-1 2-stage op

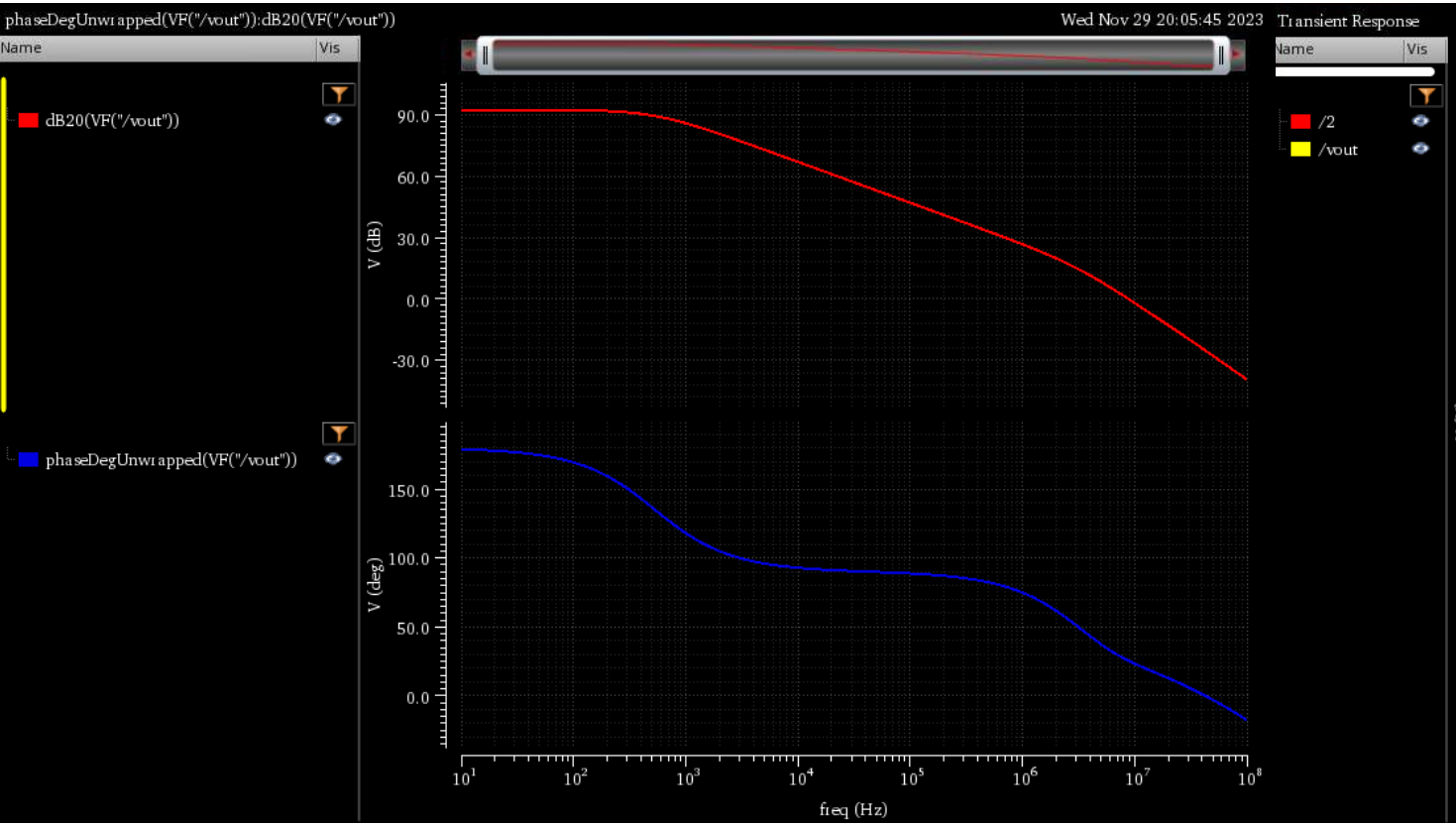

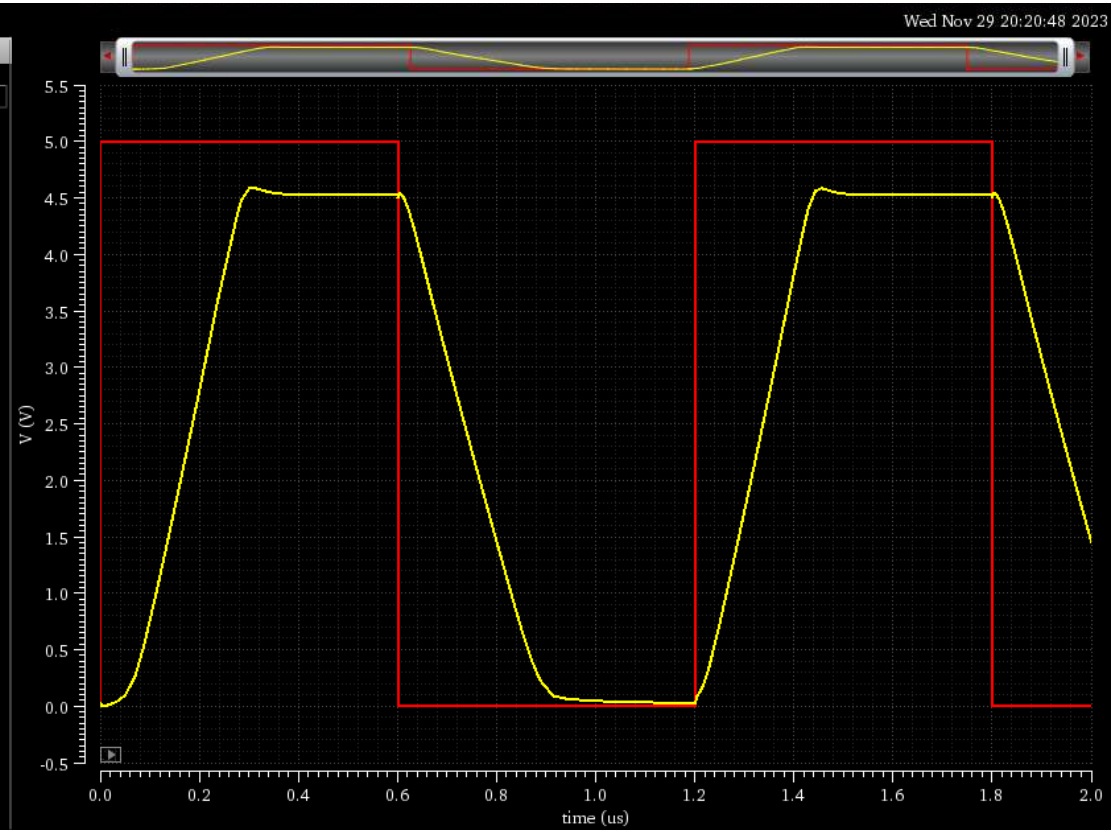

Simulation(AC)

Simulation(transient)

3-1 2-stage op

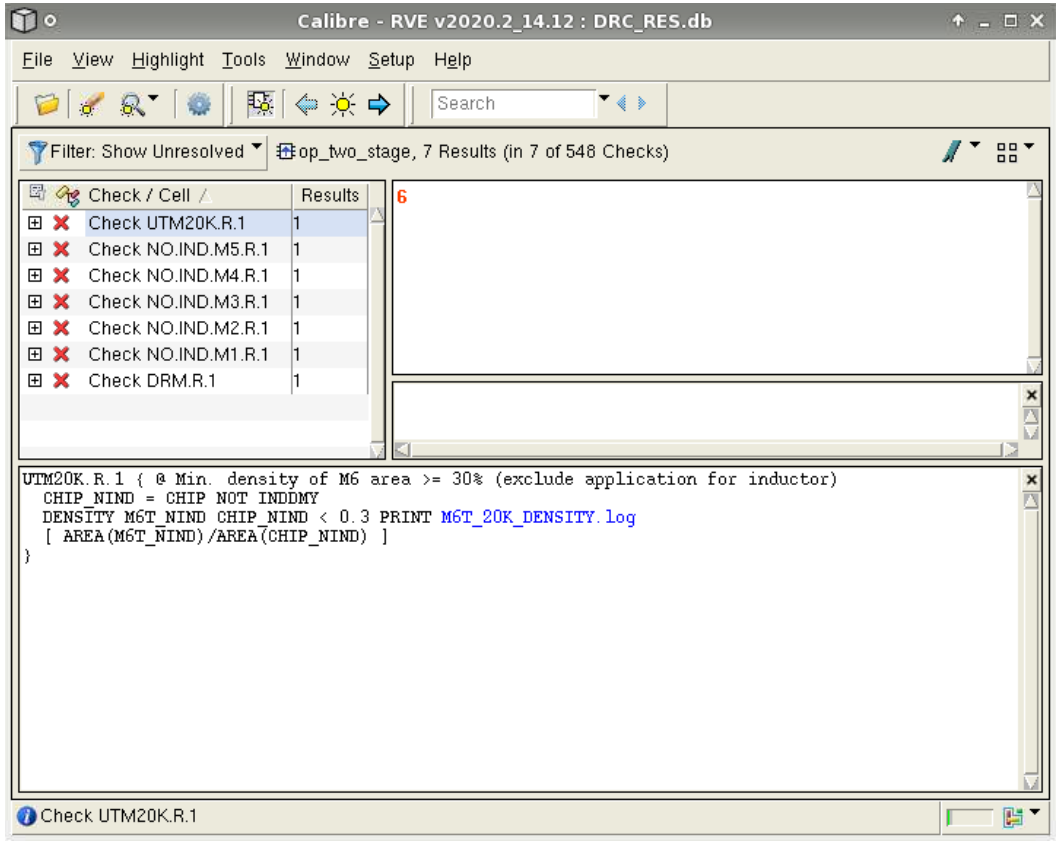

DRC

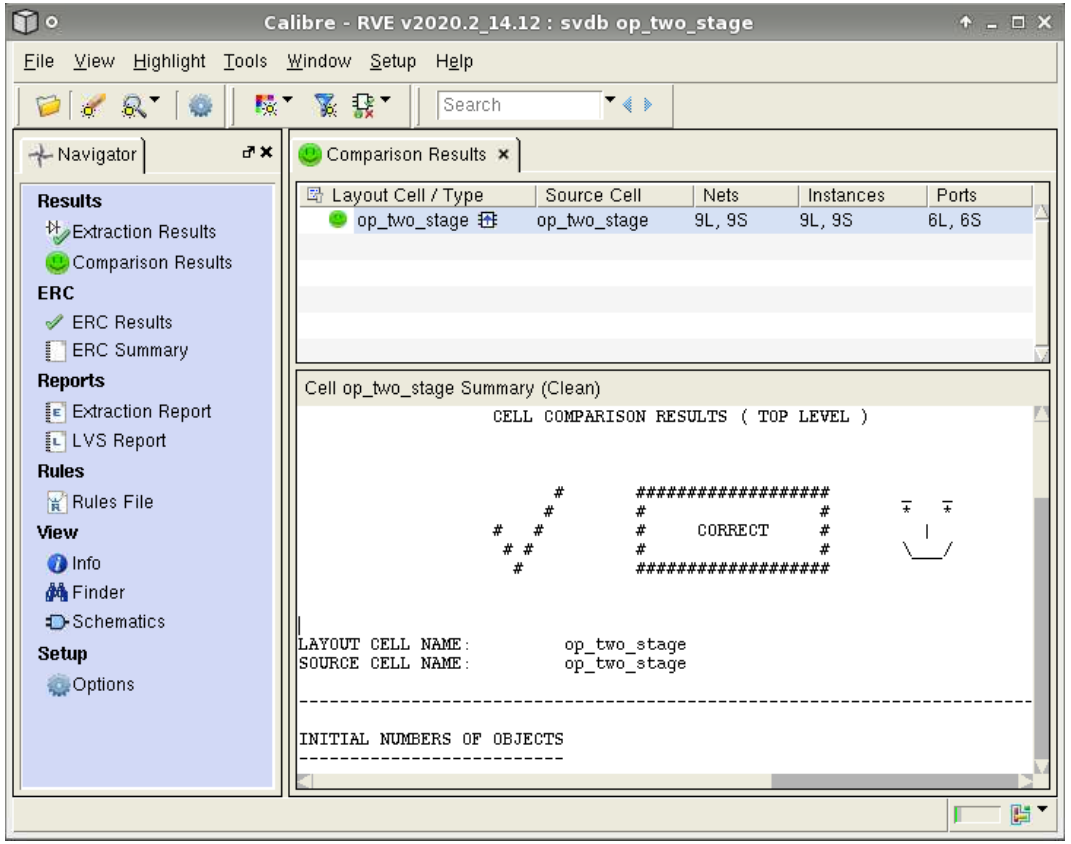

LVS

2-1 D-latch