VLSI Midterm Layout

ID:312611096

Name:黃鉦淳

Date:2023/12/04

Tool: Virtuoso

Process: T18

Abstract

1. Level-shifter
2. (Bonus) Differential Amplifier

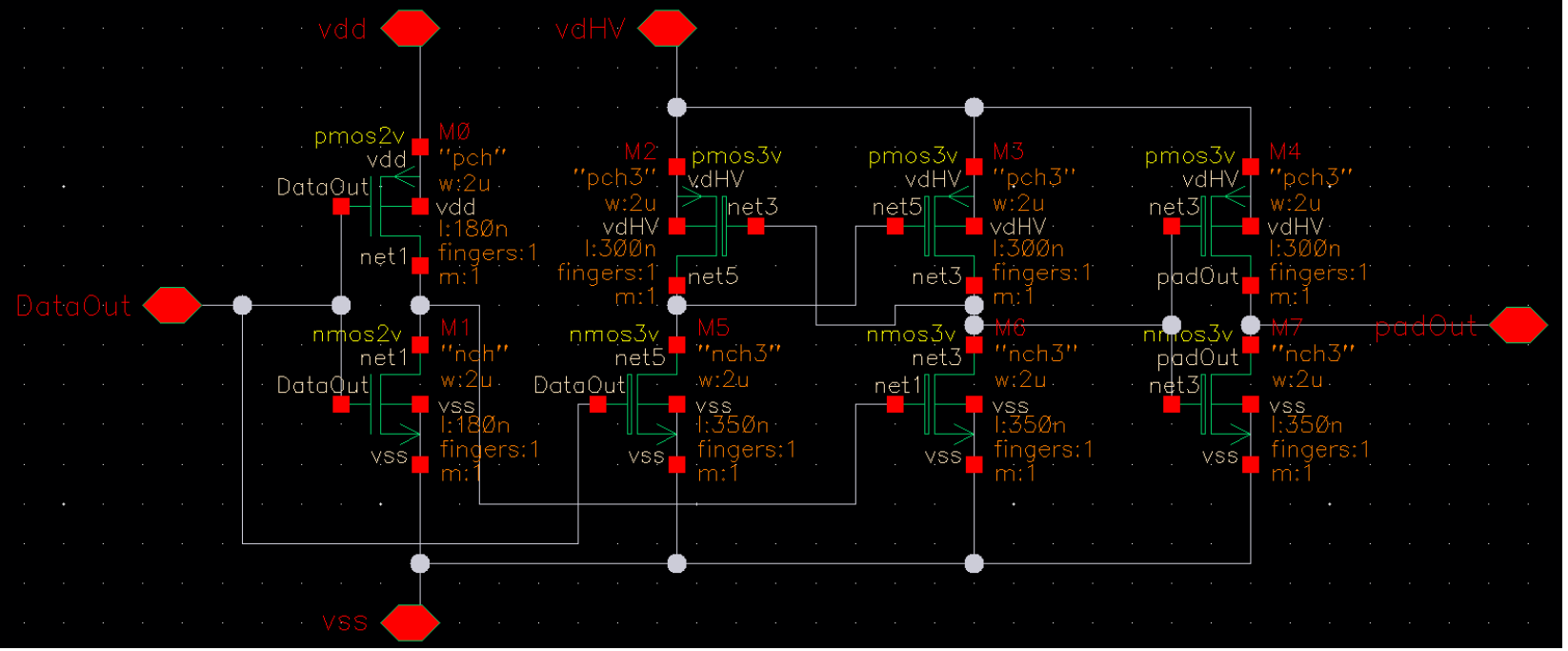

Schematic

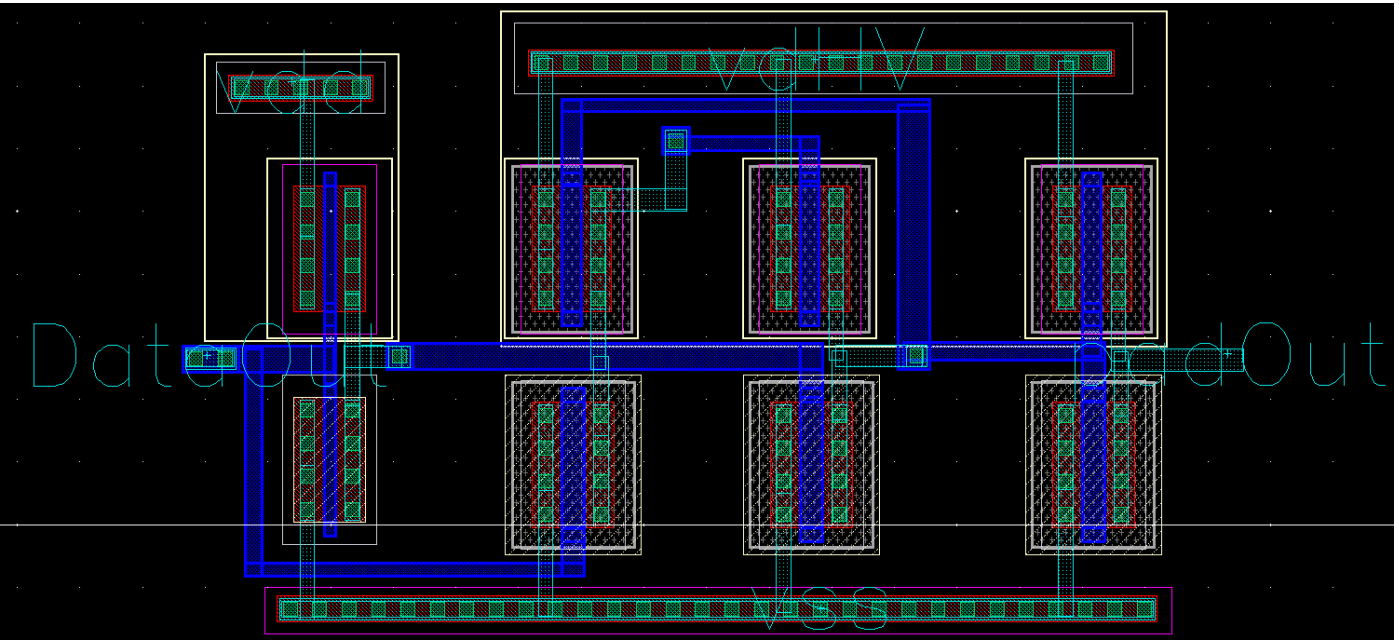

Layout

Level Shifter

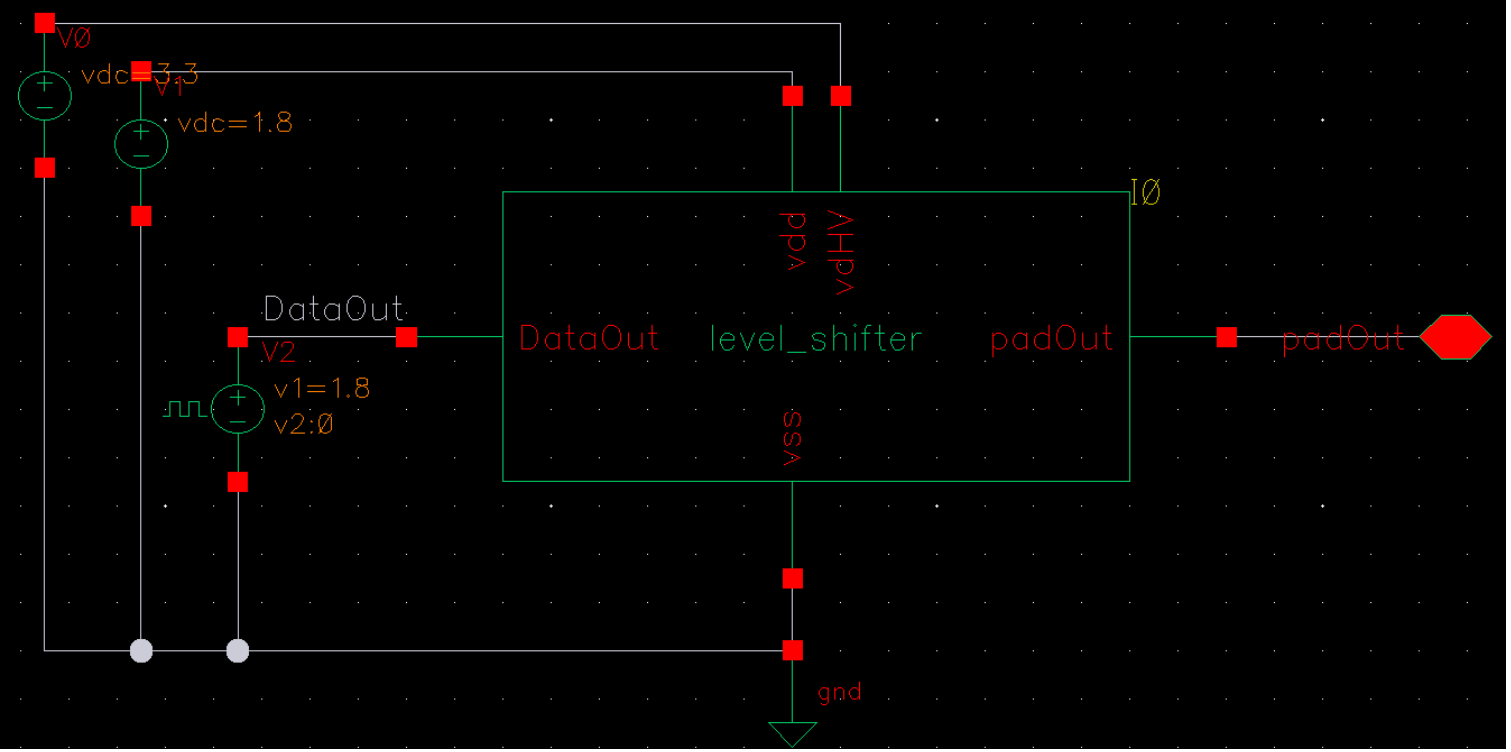

Verification

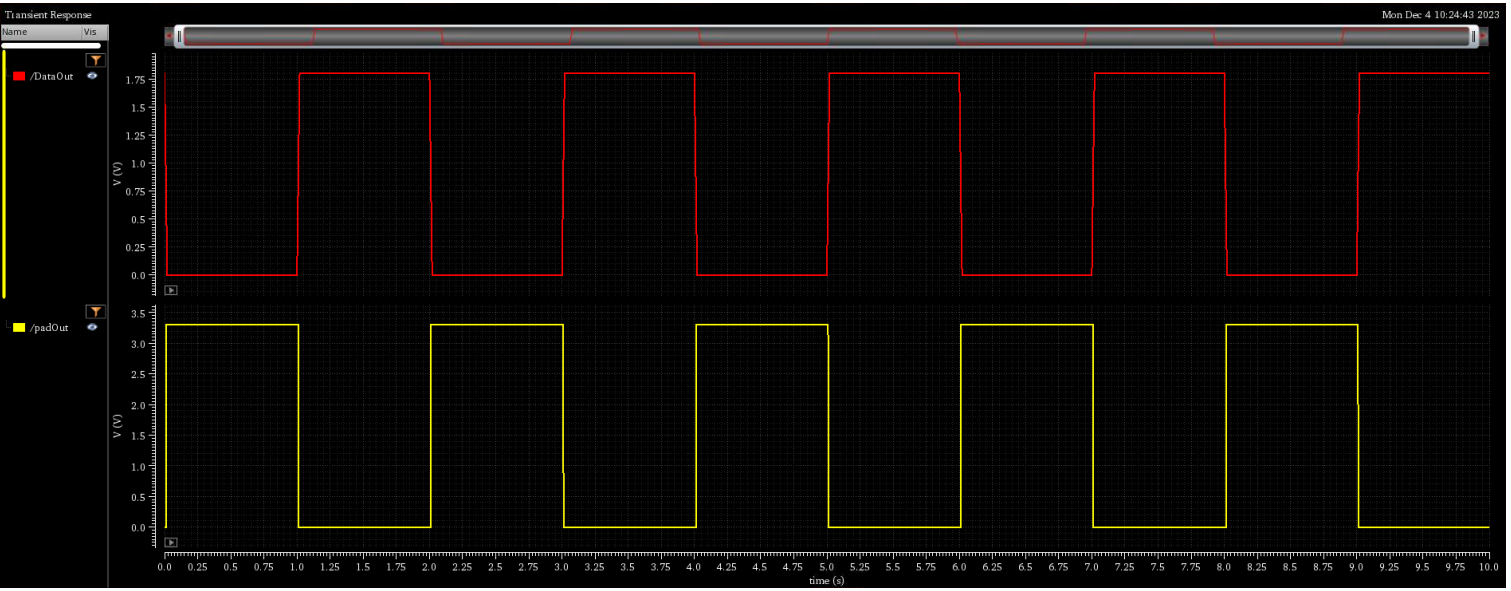

Waveform

Level Shifter

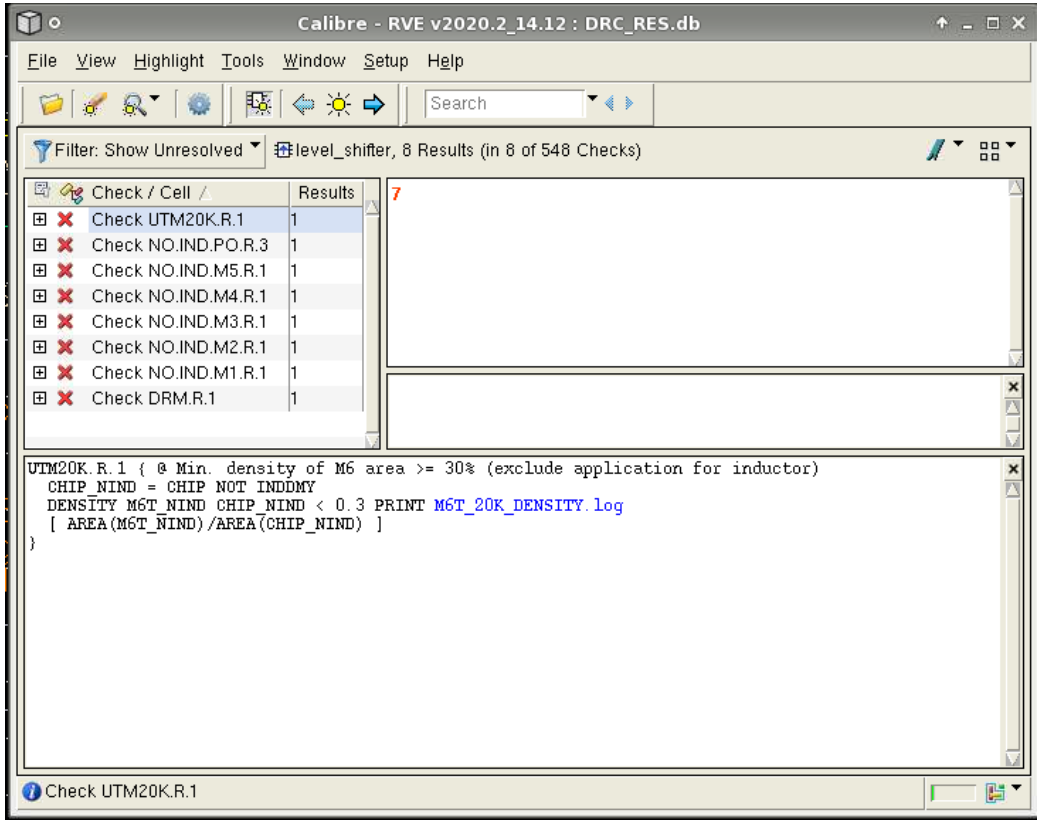

DRC

Level Shifter

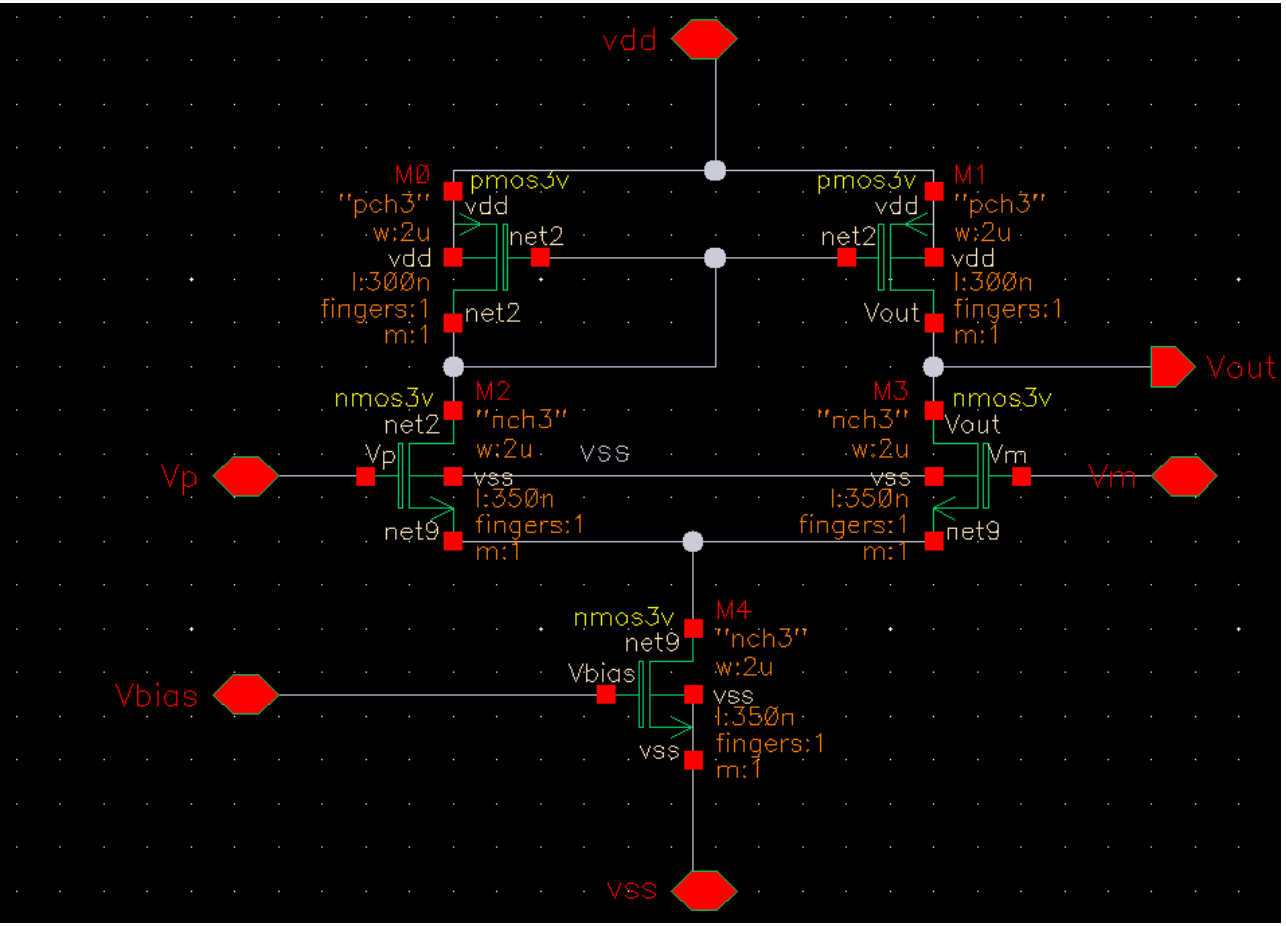

Schematic

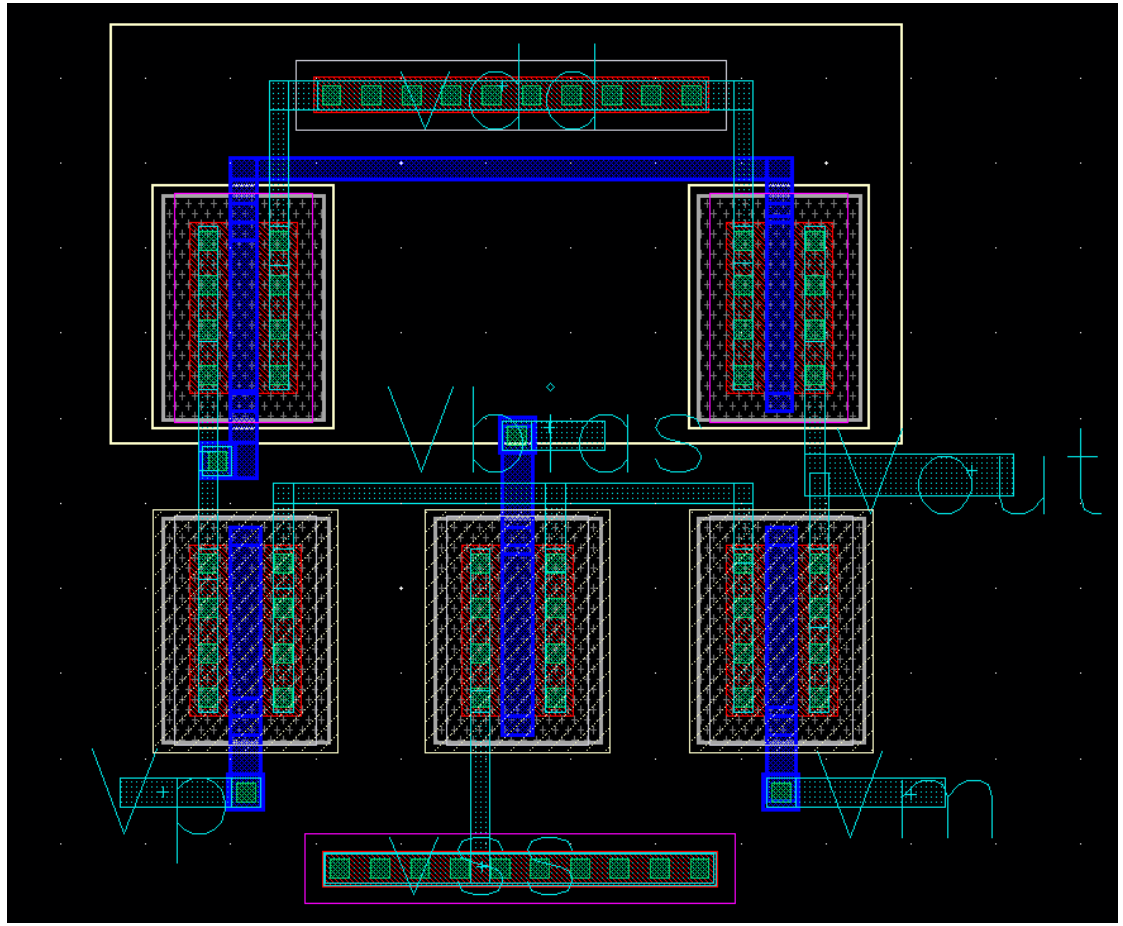

Layout

(Bonus) Differential Amplifier

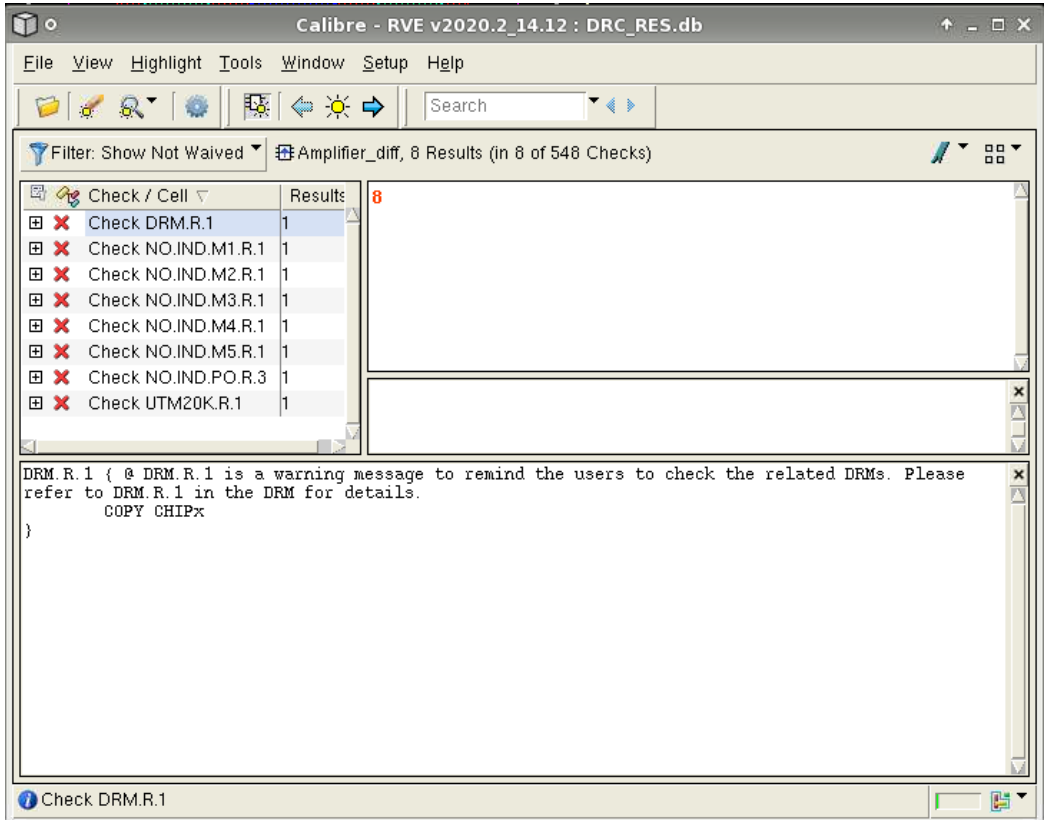

DRC

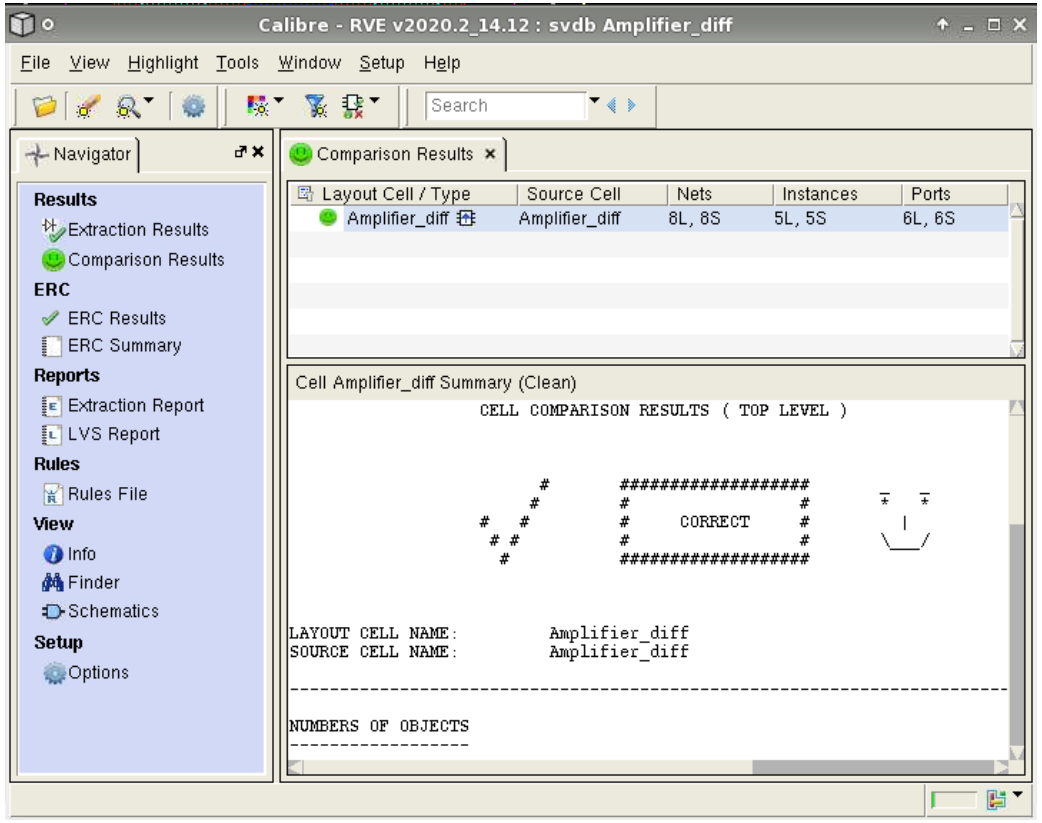

LVS

(Bonus) Differential Amplifier