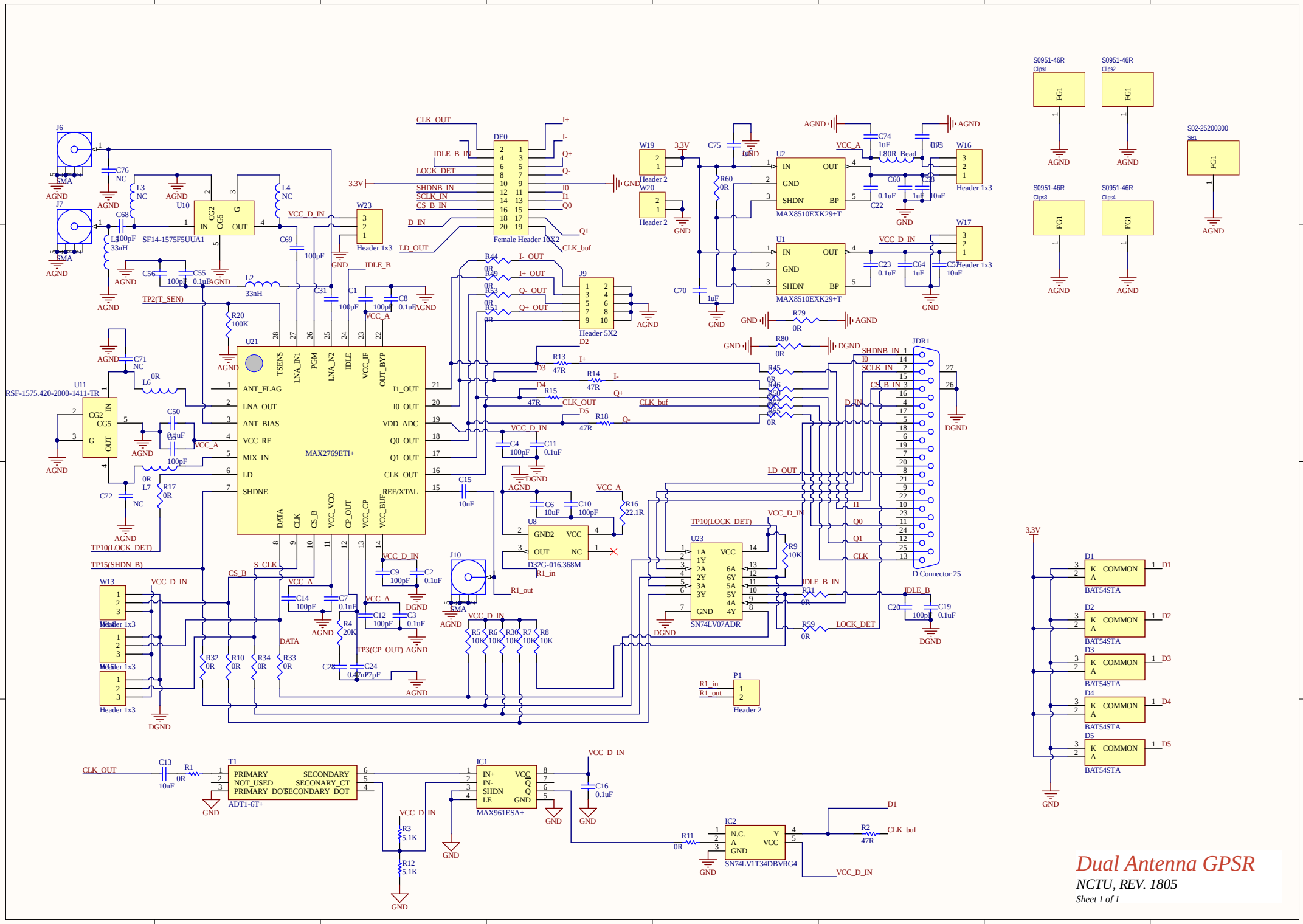
Dual Antenna GPSR
NCTU, REV. 1805
Sheet 1 of 1
MAX2769ETI+
MAX8510EXK29+T
SN74LV07ADR
MAX961ESA+
SN74LV1T34DBVRG4
ADT1-6T+
SF14-1575F5UUA1
RSF-1575.420-2000-1411-TR
D32G-016.368M
Female Header 10X2
Header 5X2
Header 1x3
Header 2
D Connector 25
BAT54STA
S0951-46R
S02-25200300

Comment	Description	Designator	Footprint	LibRef	Quantity