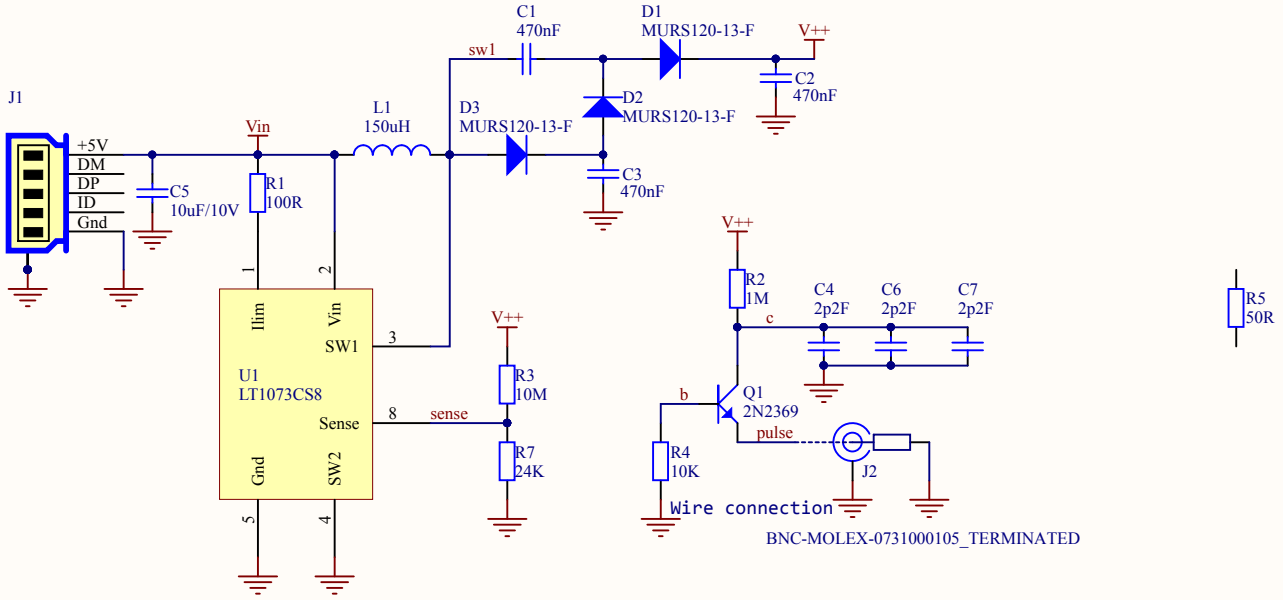

Title: Jim Williams Pulse Generator		
Size: A4	Number: V2.0	Revision:
Date: 8/02/2017		Sheet of
File: C:\Users\..\Pulser.SchDoc		Drawn By:

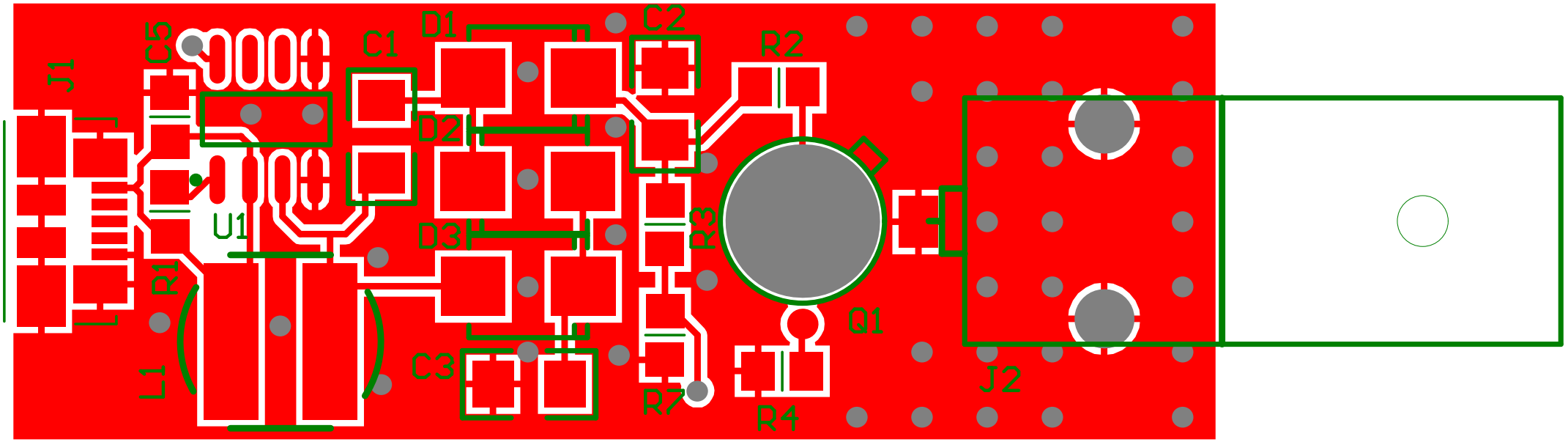
J1
C5
C1
D1
C2
R2
D2
U1
D3
R3
R1
Q1
L1
C3
R7
R4
J2

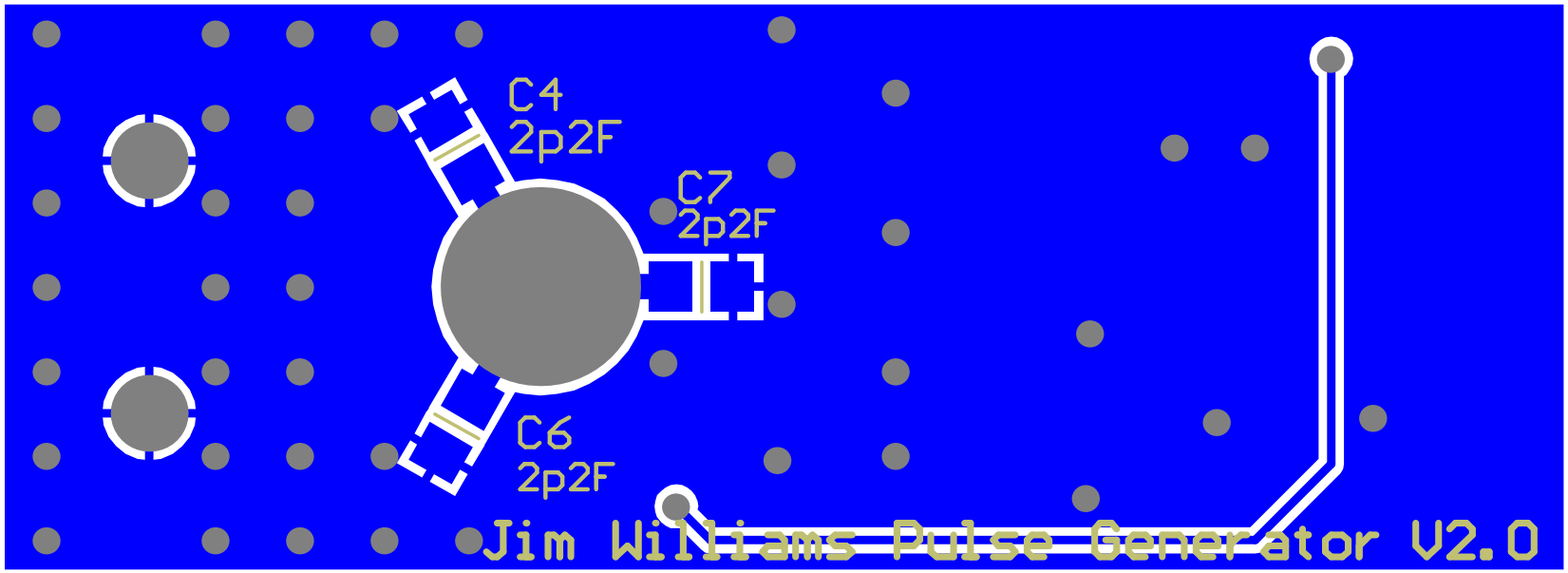
C4
2p2F
C7
2p2F
C6
2p2F
Jim Williams Pulse Generator V2.0

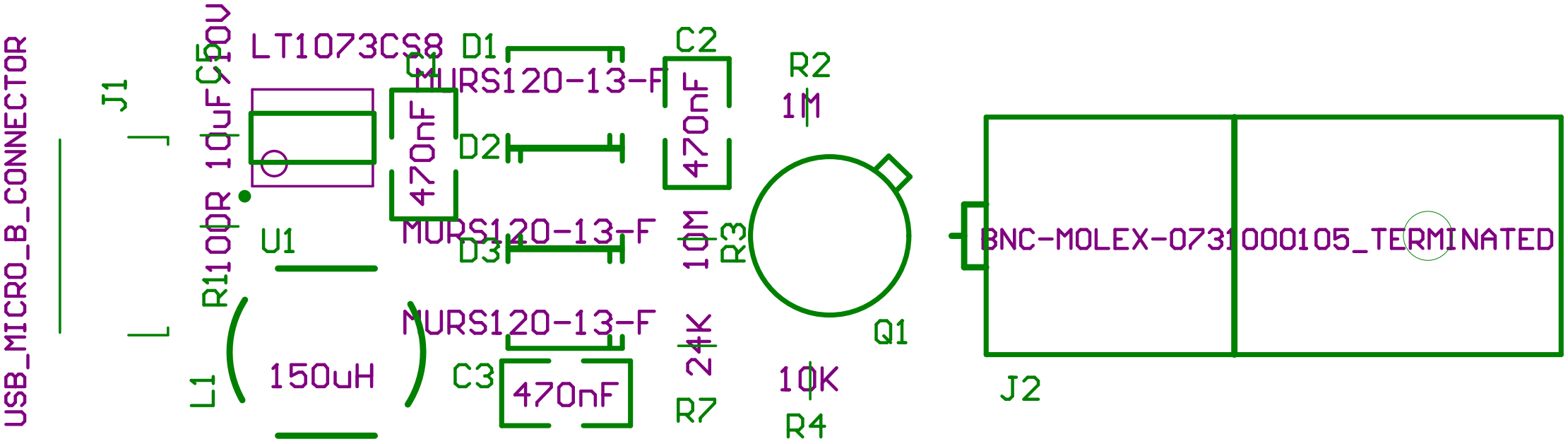
USB_MICRO_B_CONNECTOR
J1
C5
10uF
910V
LT1073CS8
C1
470nF
D1
MURS120-13-F
D2
MURS120-13-F
D3
MURS120-13-F
C2
470nF
R2
1M
R3
10M
R1
100R
U1
L1
150uH
C3
470nF
R7
24K
Q1
10K
R4
J2
BNC-MOLEX-0731000105_TERMINATED

Jim Williams Pulse Generator V2.0

Bill of Materials

Bill of Materials For Project [Pulser.PrjPCB] (No PCB Document Selected)

Source Data From:		**Pulser.PrjPCB**
Project:		**Pulser.PrjPCB**
Variant:		**None**
Creation Date:	8/02/2017	9:55:54 AM
Print Date:	08-Feb-17	9:55:59 AM

Footprint	Comment	Farnell PN	Digikey	Designator	Description	Quantity
CCNP3216-1206	470nF			C1, C2, C3	Capacitor	3
CCNP2012-0805	2p2F			C4, C6, C7	Capacitor	3
CCNP2012-0805	10uF/10V			C5	Capacitor SMT 0805	1
SMB_Diode	MURS120-13-F	1858618		D1, D2, D3	Fast / Ultrafast Diode, 200 V, 1 A	3
MOLEX - 47346-0001	USB_MICRO_B_CONNECTOR	1568026		J1	USB Micro-B Connector	1
BNC_RA CON - Molex - Resistor	BNC-MOLEX-0731000105_TERMINATED		WM5524-ND	J2	BNC Connector	1
INDUCTOR_SMT	150uH			L1	Inductor - SMT 3mm	1
TO-18-flush	2N2369			Q1	High Speed Switching Transistor	1
CR2012-0805	100R			R1	Resistor	1
CR2012-0805	1M			R2	Resistor	1
CR2012-0805	10M			R3	Resistor	1
CR2012-0805	10K			R4	Resistor	1
CR3216-1206	50R			R5	Resistor	1
CR2012-0805	24K			R7	Resistor	1
SO-8_L	LT1073CS8			U1		1
						21

Approved **Notes**