ME 165: Basic Mechanical Engineering

Robotics

Sakib Javed

Lecturer
Department of Mechanical Engineering
Bangladesh University of Engineering and Technology (BUET)
Dhaka-1000, Bangladesh

sakibjaved@me.buet.ac.bd

Parts of a Robot

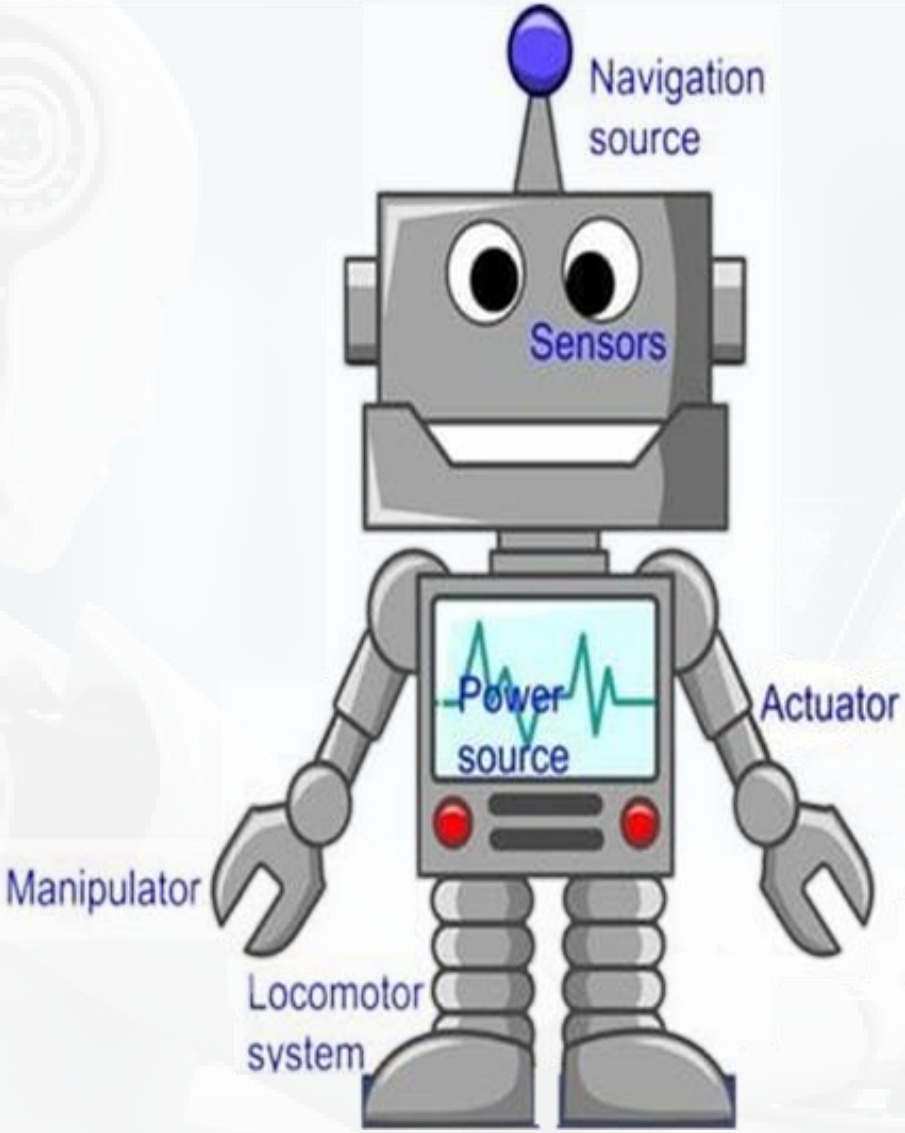

Robot Anatomy - study of skeleton of Robot

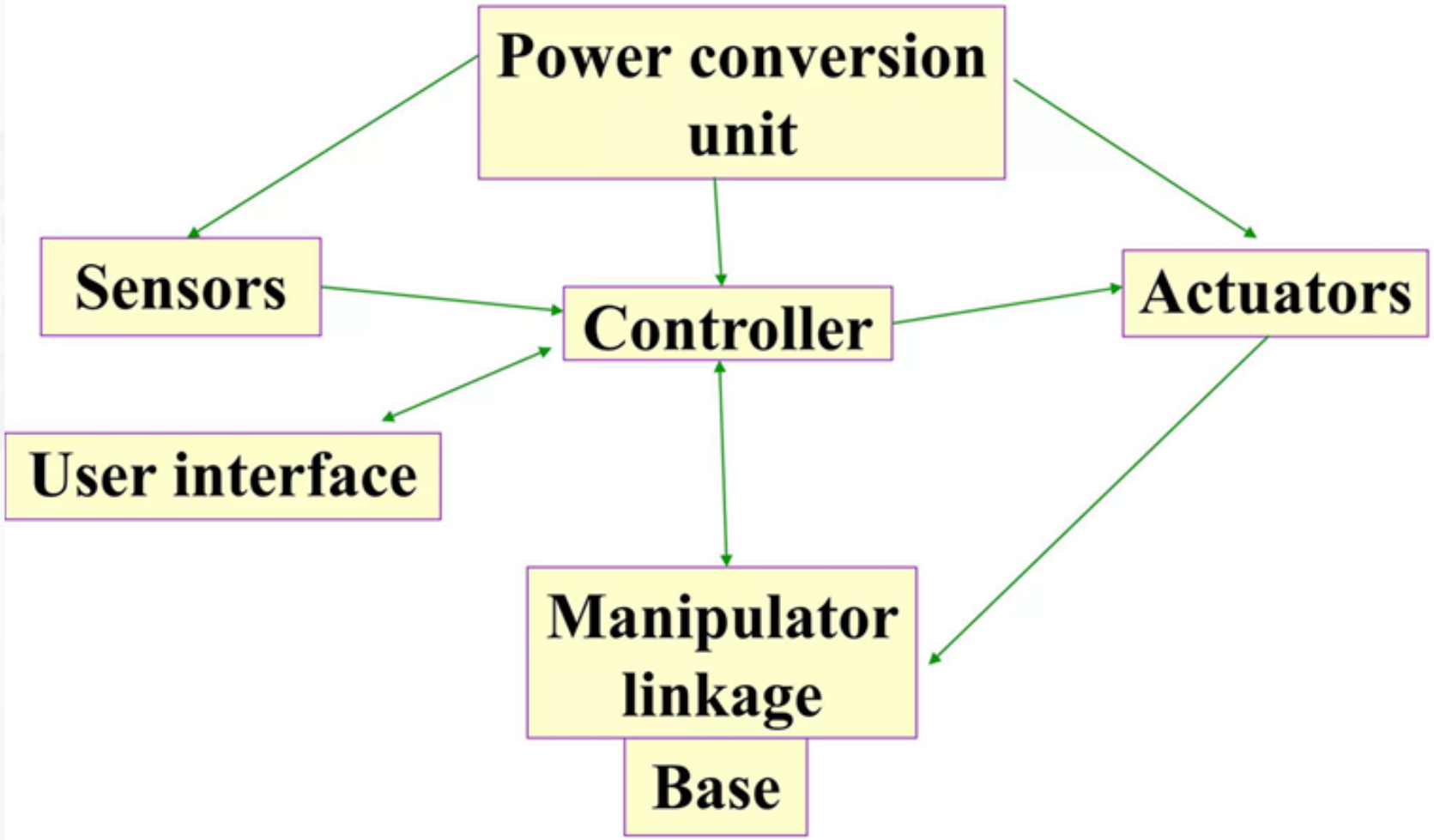

Robot Components

- Manipulator
- End effectors
- Actuators
- Processor
- Controller
- Sensors
- Software

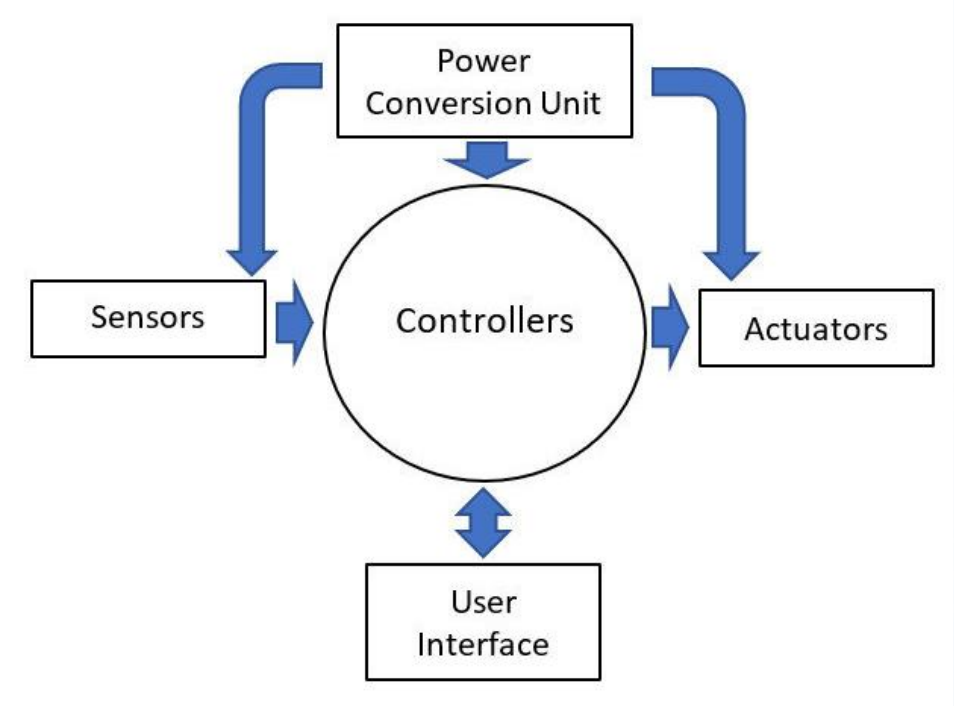

Robot Components

- Manipulator: the main body of the robot, which consists of the links, joints, and other structural elements of the robot. They are also commonly referred to as robotic arms.
- End effectors: peripheral device that is attached to a robot's wrist, allowing the robot to interact with its task.
- Actuators: a device that converts energy into physical motion. Can be referred to "muscles" of the manipulators. Common types are servomotors, stepper motors, pneumatic actuators, and hydraulic actuators.
- Processor: The processor can be referred to as the "brain" of the robot. It calculates the motions of the robot's joints based on the programs it runs, determines how much and how fast each joint must move to achieve the desired location and speeds, passes the calculated data to the controller, and oversees the coordinated actions of the controller and the sensors. The processor is generally a computer, which works like all other computers but is dedicated to this purpose.

Robot Components

- Controller: The controller receives its data from the processor, controls the motions of the actuators, and coordinates the motions with the sensory feedback information.
- In some systems, the controller and the processor are integrated together into a single unit.
- Sensors: Electro-mechanical components that allow the robot to react to its environment.
- Software: Three groups of software programs are used in a robot.
  - The operating system operates the processor.
  - Robotic software calculates the necessary motions of each joint based on the kinematic equations of the robot.
  - A collection of application-oriented routines and programs are developed in order to use the robot or its peripherals for specific tasks, such as assembly, machine loading, material handling, and so on.

Manipulator

Manipulator consists of joints and links

- Joints provide relative motion
- Links are rigid members between joints
- Various joint types: linear and rotary
- Each joint provides a “degree of freedom”
- Most robots possess five or six degrees of freedom.

Robot manipulator consists of two sections:

- Body and arm for positioning of objects in the robot’s work volume
- Wrist assembly for orientation of objects

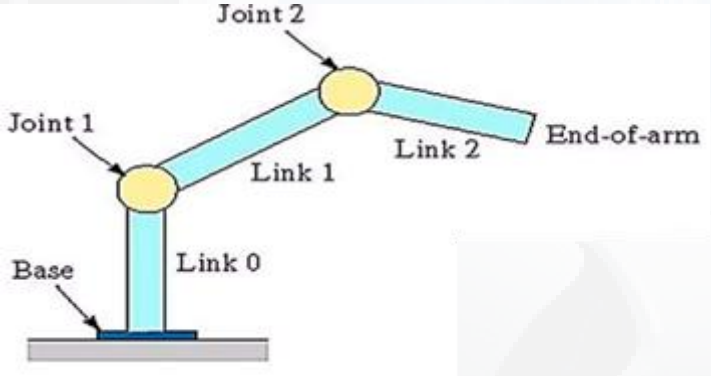

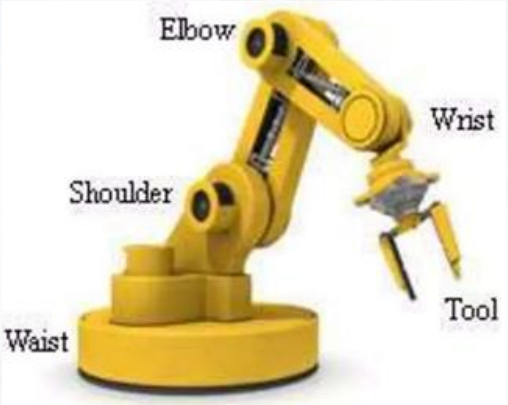

Degrees of Freedom (DOF)

The degrees of freedom of a rigid body is defined as its total number of independent movements. Each joint or axis on the robot introduces a degree of freedom.

A rigid body in 3D space can have up to 6 DOF:

- **3 Translational DOF**: movement along the X, Y, and Z axes.
- **3 Rotational DOF**: rotation around the X (roll), Y (pitch), and Z (yaw) axes.

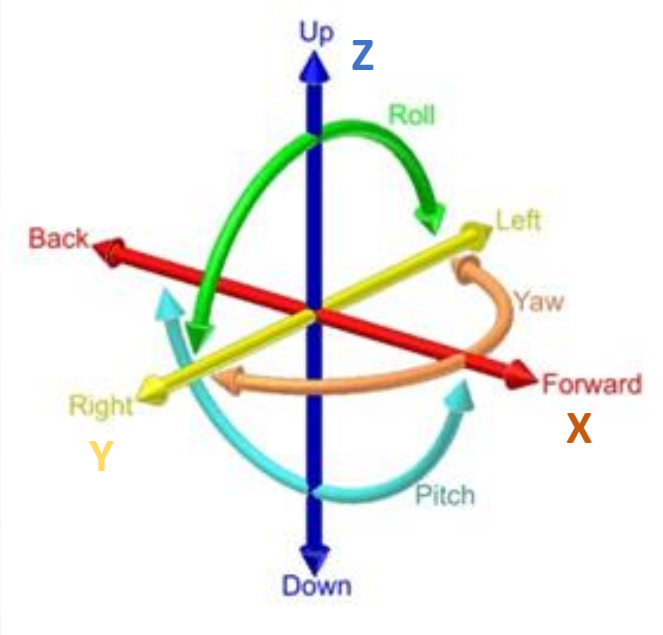

Degrees of Freedom (DOF)

Planar Mechanism:

A planar mechanism in robotics is a mechanical system where all the motion of the links and joints occurs in a single plane, typically the XY plane. This type of mechanism operates with a maximum of 3 degrees of freedom (DOF)—two translational (x, y) and one rotational (θ about the z-axis).

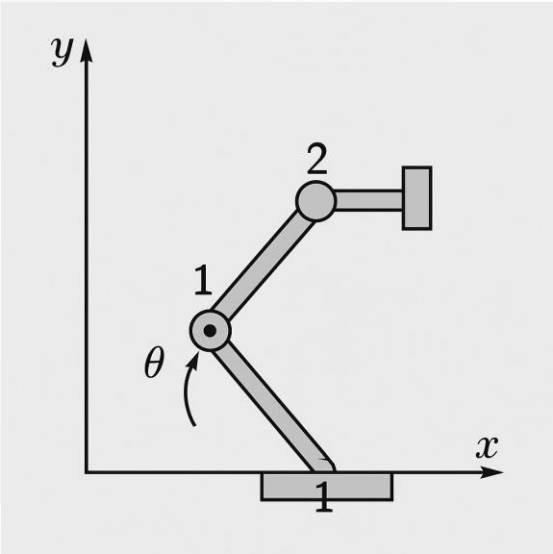

Degrees of Freedom (DOF)

Spatial Mechanism:

A spatial mechanism refers to a mechanical system in which the links and joints operate in three-dimensional (3D) space, allowing motion in all six degrees of freedom (DOF): three translational (x, y, z) and three rotational (pitch, yaw, roll).

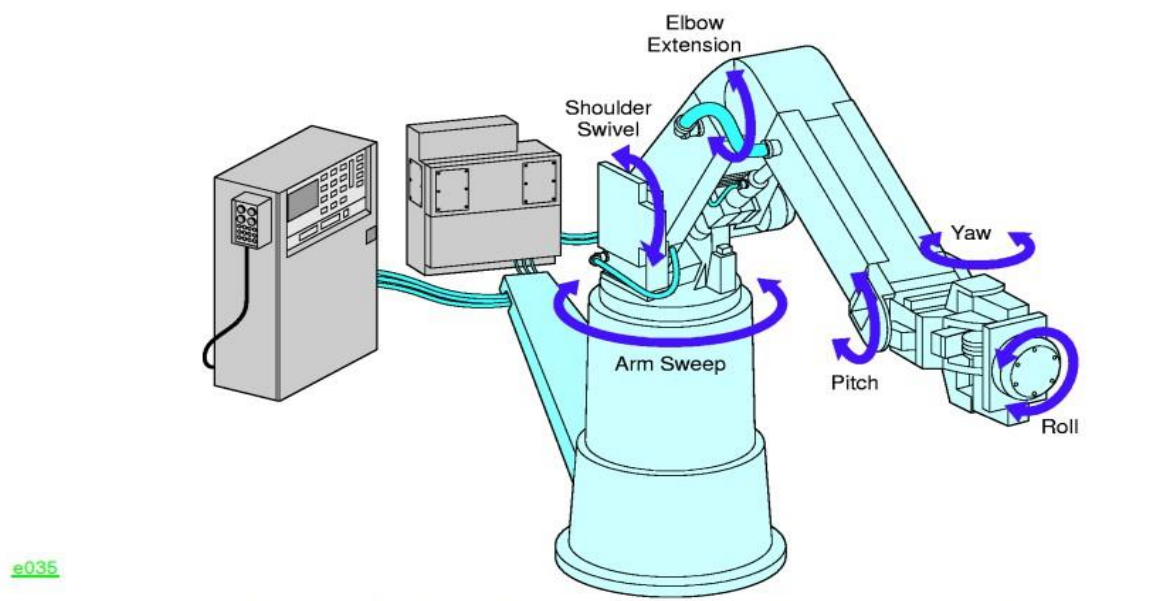

In most general case of arbitrarily positioning and orienting an object in 3D 6 DOFs are required

Degrees of Freedom (DOF)

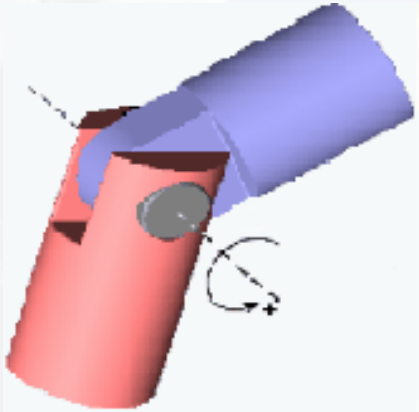

Revolute
1 Degree of Freedom

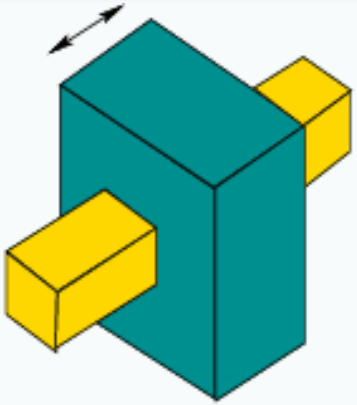

Prismatic
1 Degree of Freedom

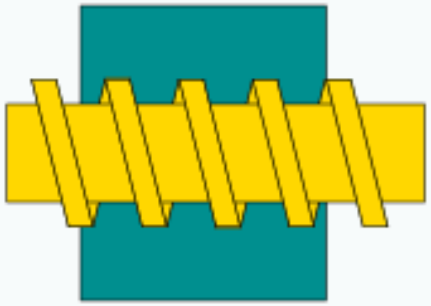

Screw
1 Degree of Freedom

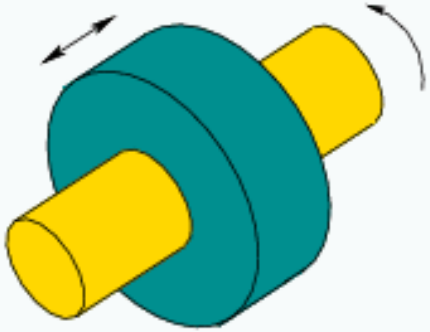

Cylindrical
2 Degrees of Freedom

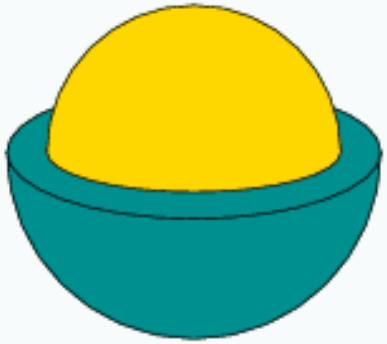

Spherical
3 Degrees of Freedom

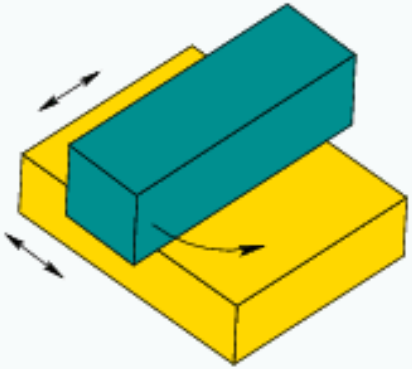

Planar
3 Degrees of Freedom

Degrees of Freedom (DOF)

- ✓ A point in 2-D: 2 DOF
- ✓ A point in 3-D space: 3 DOF
- ✓ A rigid body in 3-D: 6 DOF
- ✓ Spatial Manipulator: 6 DOF
- ✓ Planar Manipulator: 6 DOF

The Robotic Joints

A robot joints are a mechanism that permits relative movement between the links of a robotic arm. Robots may have different types of joints, such as linear, rotary, sliding, or spherical. Most robots have either a linear (prismatic) joint or a rotary (revolute) joint.

Name of joint	Representation	Description
Revolute		Allows relative rotation about one axis.
Cylindrical	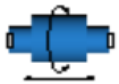	Allows relative rotation and translation about one axis.
Prismatic		Allows relative translation about one axis.
Spherical		Allows three degrees of rotational freedom about the center of the joint. Also known as a ball-and-socket joint.
Planar		Allows relative translation on a plane and relative rotation about an axis perpendicular to the plane.

The Robotic Joints

Prismatic Joints:

Prismatic joints (*L*) are known as sliding as well as linear joints. They are called prismatic because the cross section of the joint is considered as a generalized prism. They permit links to move in a linear relationship.

Revolute Joints:

Revolute joints permits only angular motion between links.

The Robotic Joints

Prismatic Joints (Translational Motion)

- Linear joint (type L)
- Orthogonal joint (type O)

Revolute Joints (Rotary Motion)

- Rotational Joint (type R)
- Twisting Joint (type T)
- Revolving joint (type V)

Translational Motions Joints

Linear Joint

Type L joint; the relative movement between the input link and the output link is a translational sliding motion, with the axes of the two links parallel.

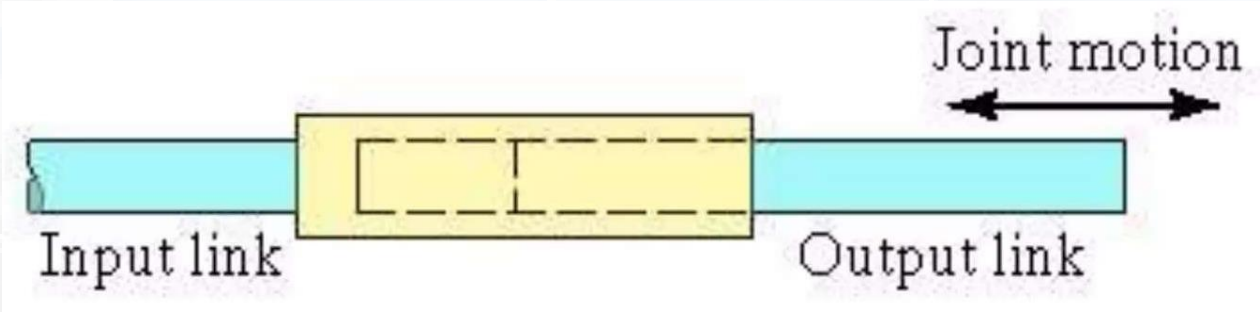

Translational Motions Joints

Orthogonal Joint

Type O joint; the relative movement between the input link and the output link is a translational sliding motion, but the output link is perpendicular to the input link.

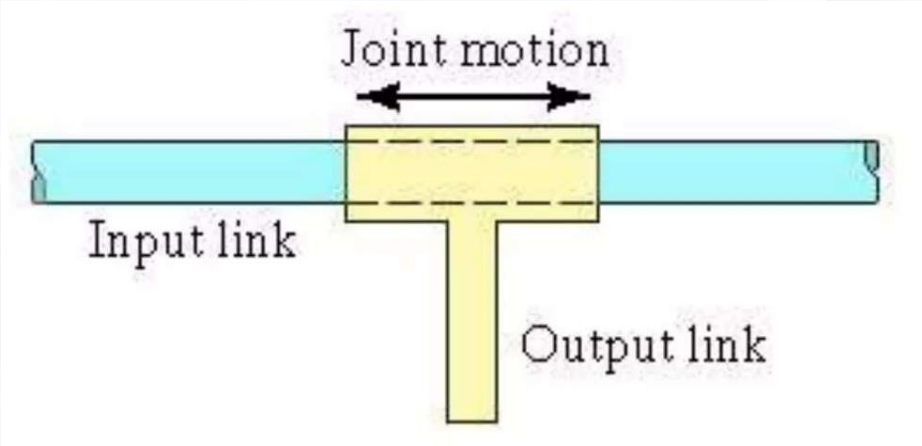

Rotary Motions Joints

Rotational Joint

Type R joint; this provides rotational relative motion, with the axis of rotational perpendicular to the axes of the input and output links.

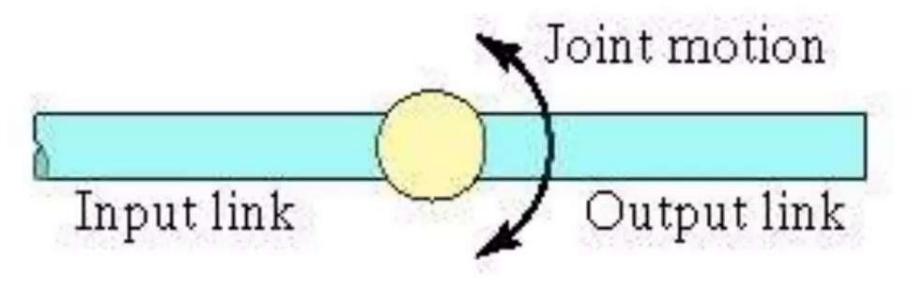

Rotary Motions Joints

Twisting Joint

Type T joint; this provides rotary motion, but the axis of rotation is parallel to the axes of the two links.

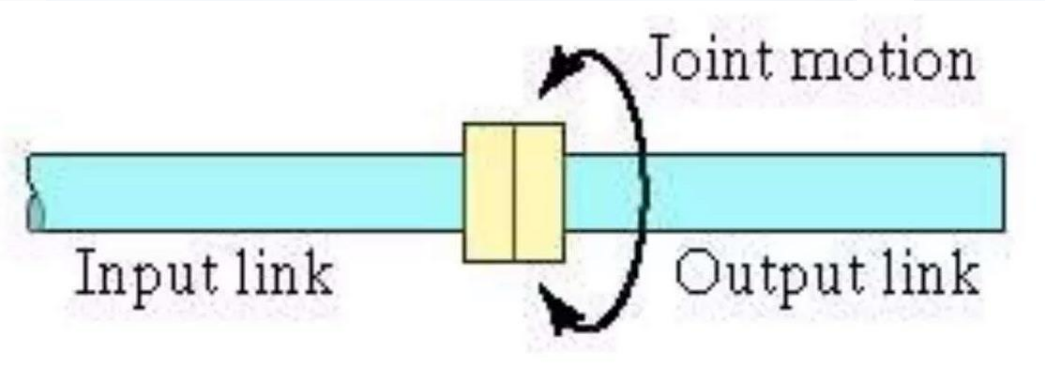

Rotary Motions Joints

Revolving Joint

Type V joint; the axis of the input link is parallel to the axis of rotation of the joint, and the axis of the output link is perpendicular to the axis of rotation.

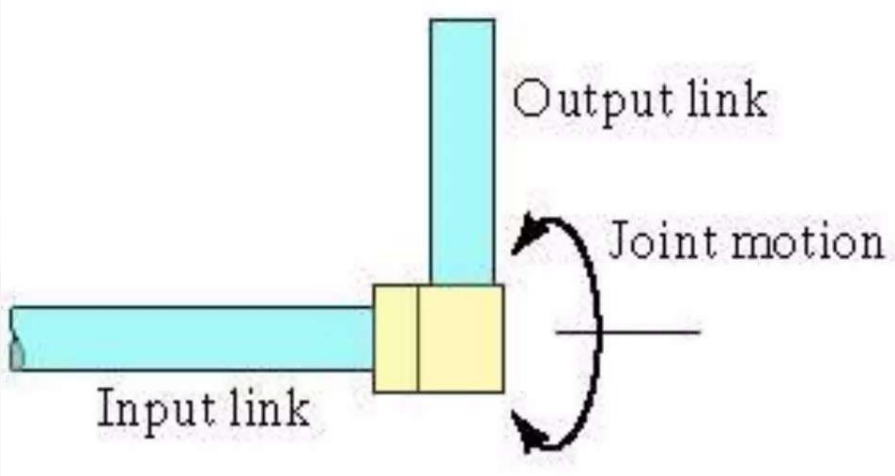

Joint Notation Scheme

- Uses the joint symbols (L, O, R, T, V) to designate joint types used to construct the robot manipulator
- Separates body and arm assembly from wrist assembly using a colon (:)
- Example: **TVR: TR**

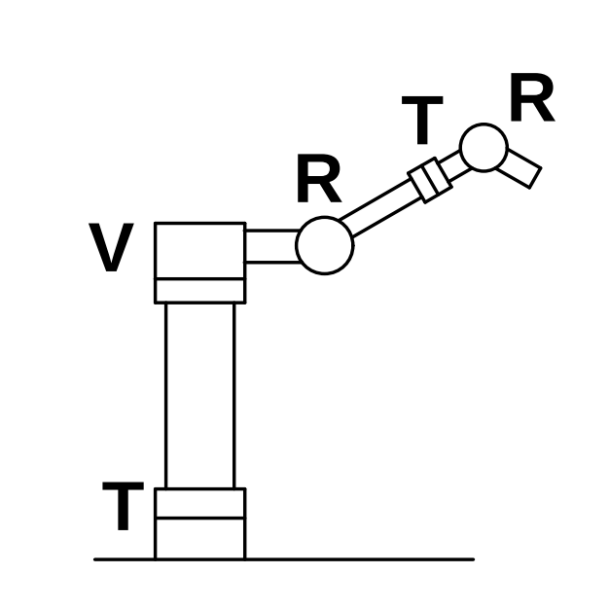

Joint Representations

Symbolic representation of joints

❖ Arrows show the direction of motion

(a) Prismatic joint

(b) Revolute joint

(c) Revolute joint

(c1) Up and down rotation

(c2) Back and forth rotation

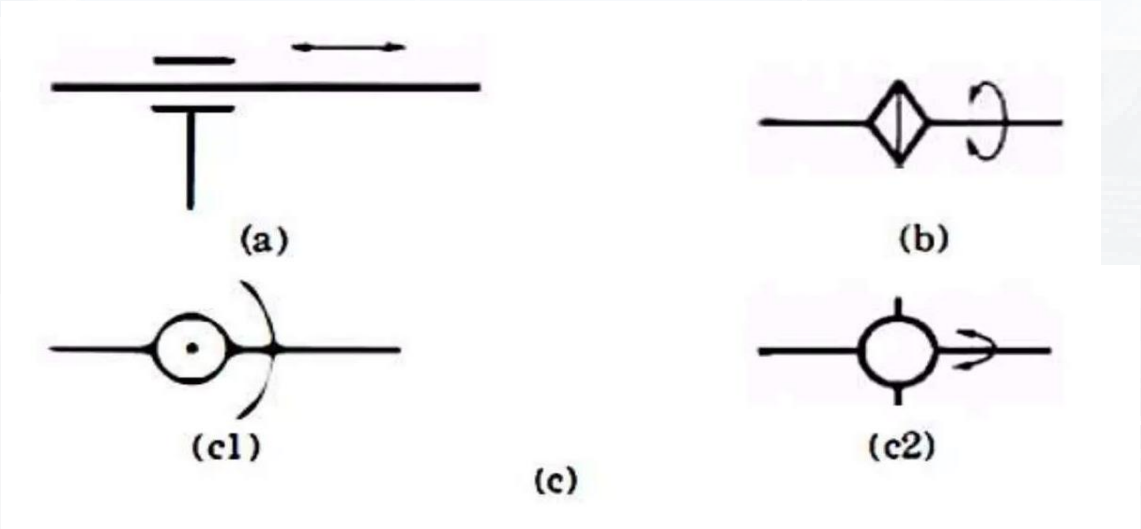

Example

Sketch the following manipulator configurations:

(a) TRT, (b) VVR, (c) VROT.

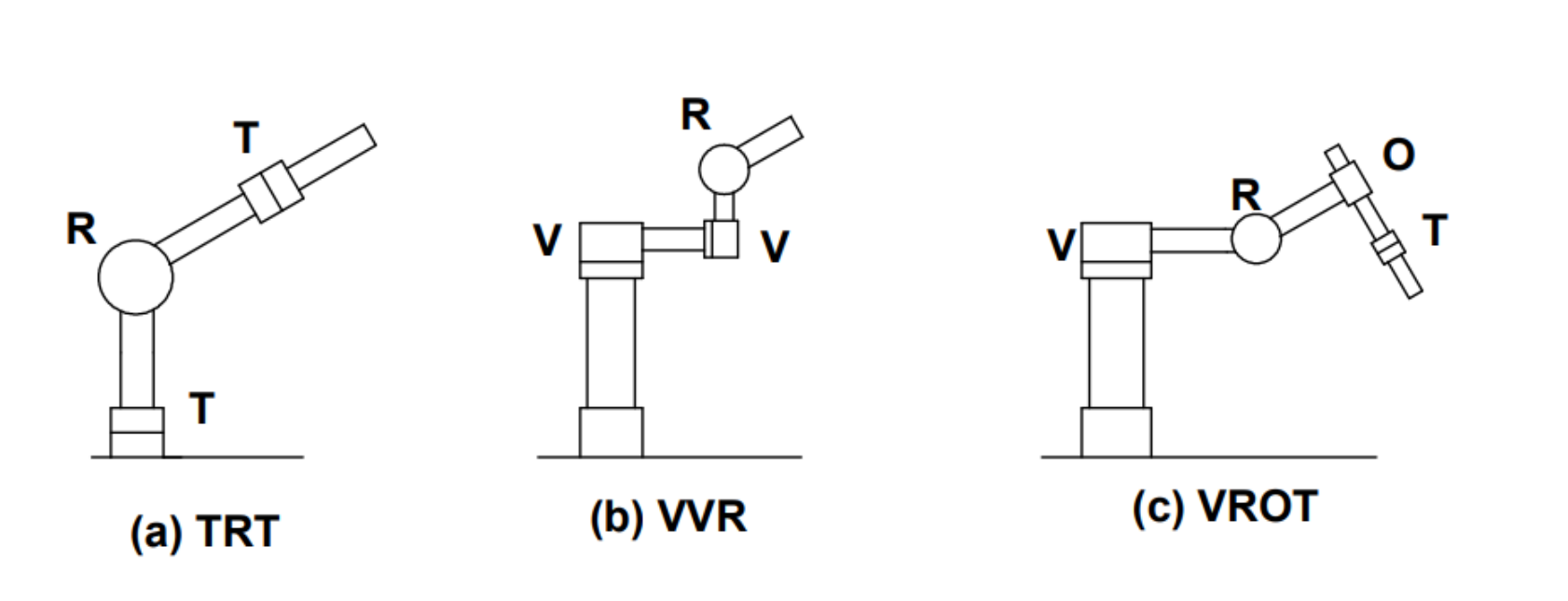

Example

Sketch the following manipulator configurations:

(a) TRL, (b) OLO, (c) LVL.

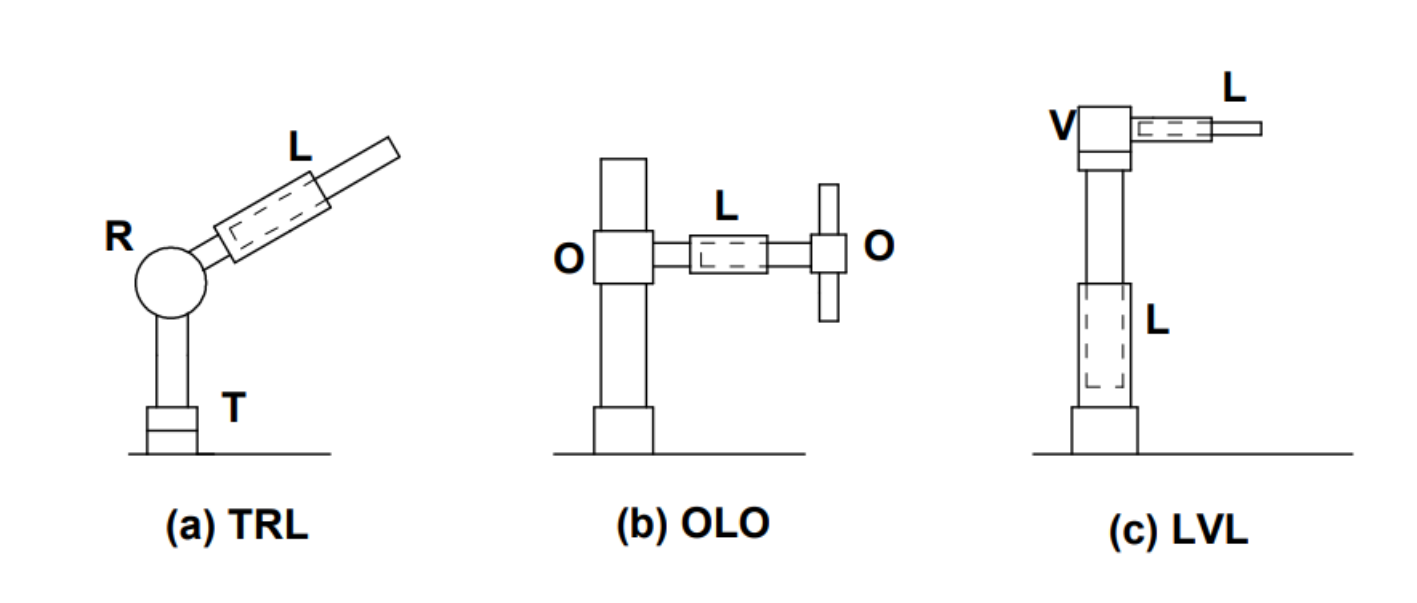

Example

Sketch the following manipulator configurations:

(a) TRT:R, (b) TVR:TR, (c) RR:T.

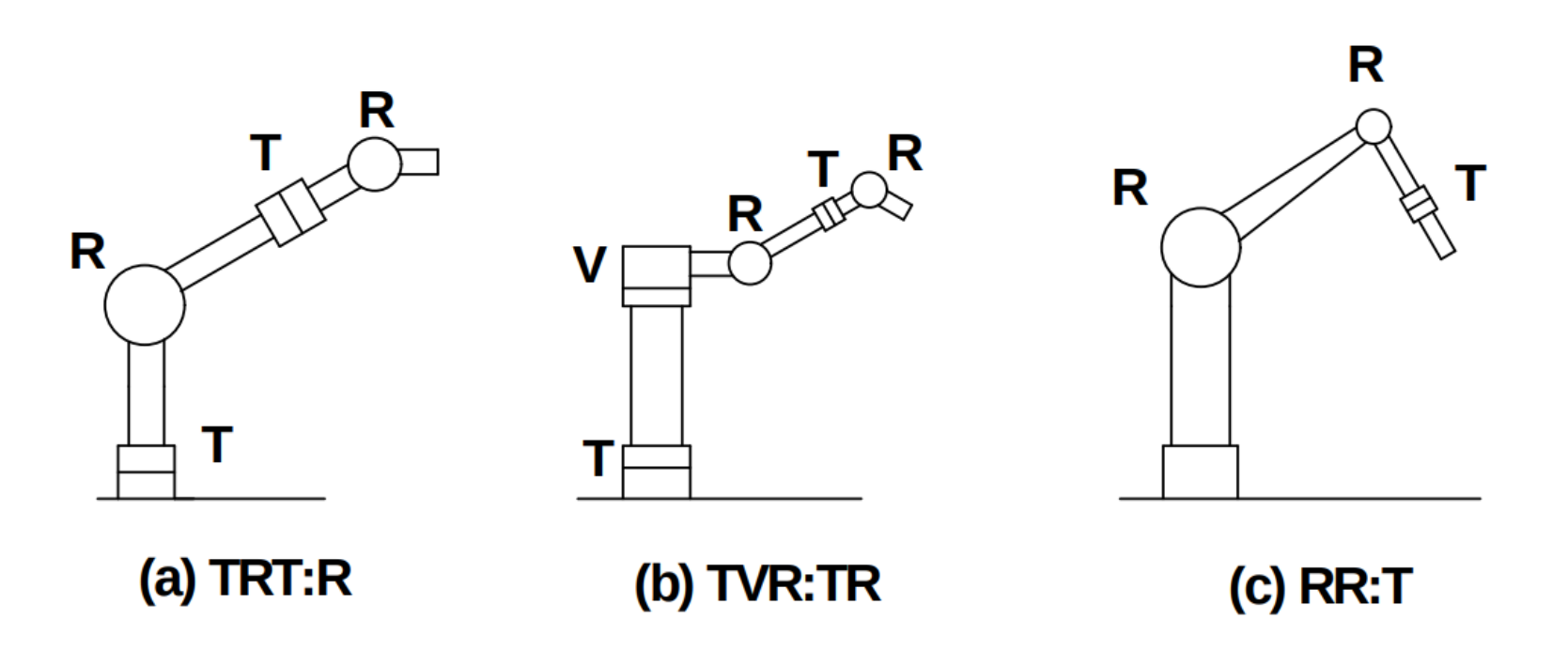

Example

Sketch the following manipulator configurations:

(a) LRL

(b) RRL

(c) TRL

(d) LVL

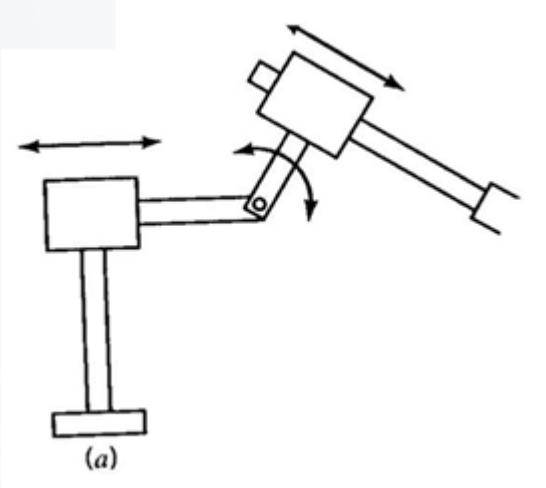

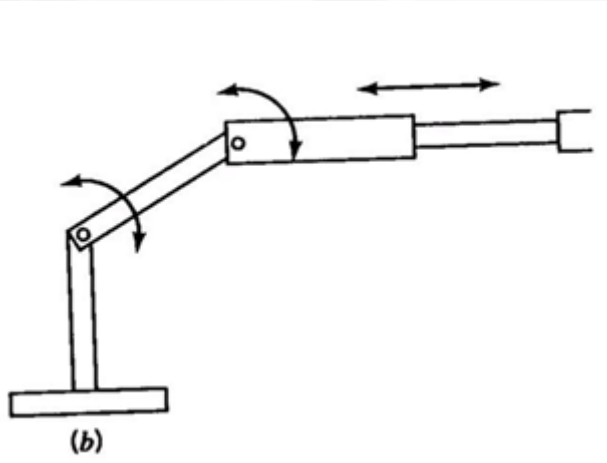

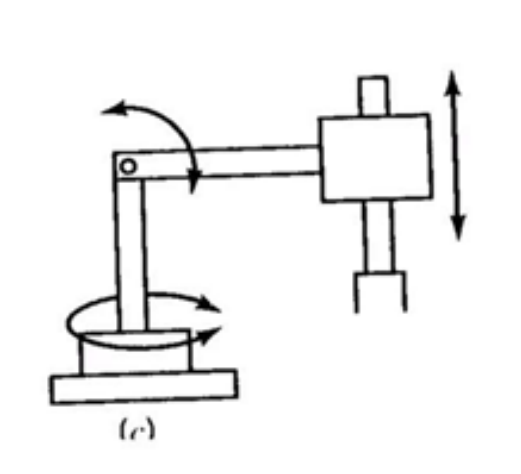

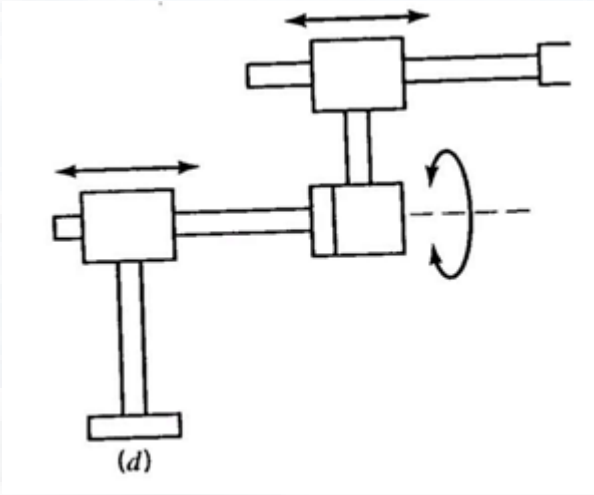

Robot Body and Arm Configurations

Five common body and arm configurations for industrial robots:

- Cartesian coordinate body and arm assembly
- Cylindrical body and arm assembly
- Spherical Coordinate body and arm assembly
- Polar Coordinate body and arm assembly
- Jointed-arm body and arm assembly
- Selective Compliance Assembly Robot Arm (SCARA)

Function: To position an end effector (e.g. gripper, tool) in space

Robot Workspace

The **workspace of a robot** is the **total volume or area** that the robot's end-effector (e.g., gripper, tool) can reach, considering its joint limits, link lengths, and configuration. It defines the **operational boundaries** of the robot.

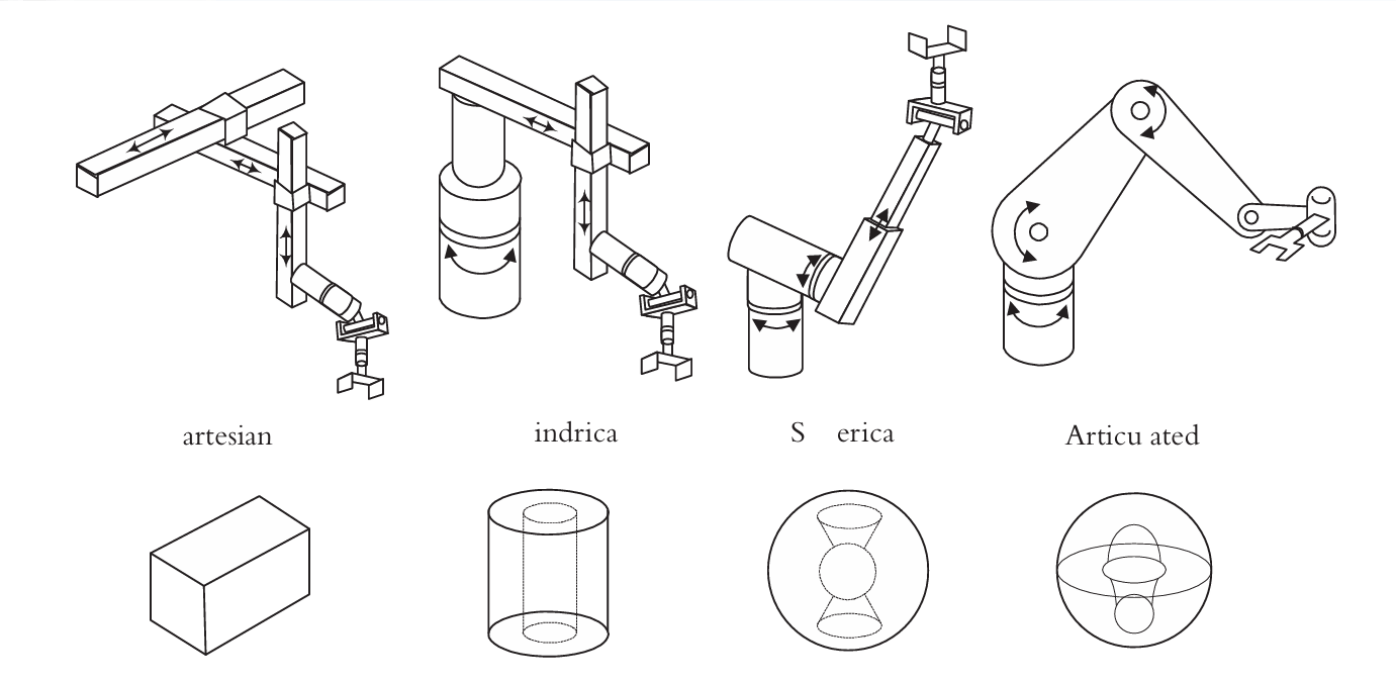

Cartesian Coordinate

- Consists of links connected by **linear joints (L)** and **orthogonal joints (O)**
- 3 Prismatic movements
- Notation:
  - ✓ **LLL** (Gantry robots)
  - ✓ **LOO** (Rectangular robot / x-y-z robot)

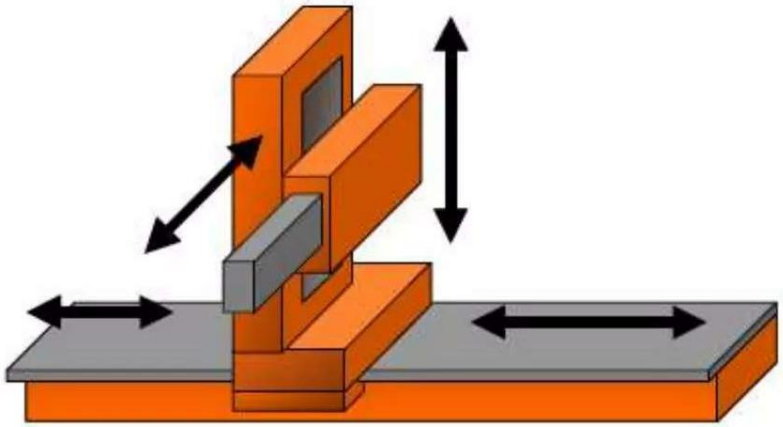

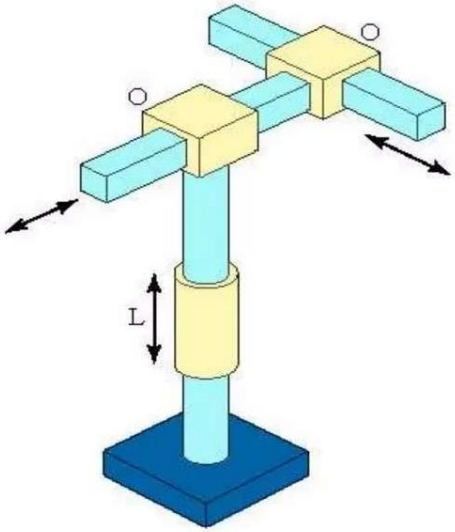

Cartesian Robot Workspace

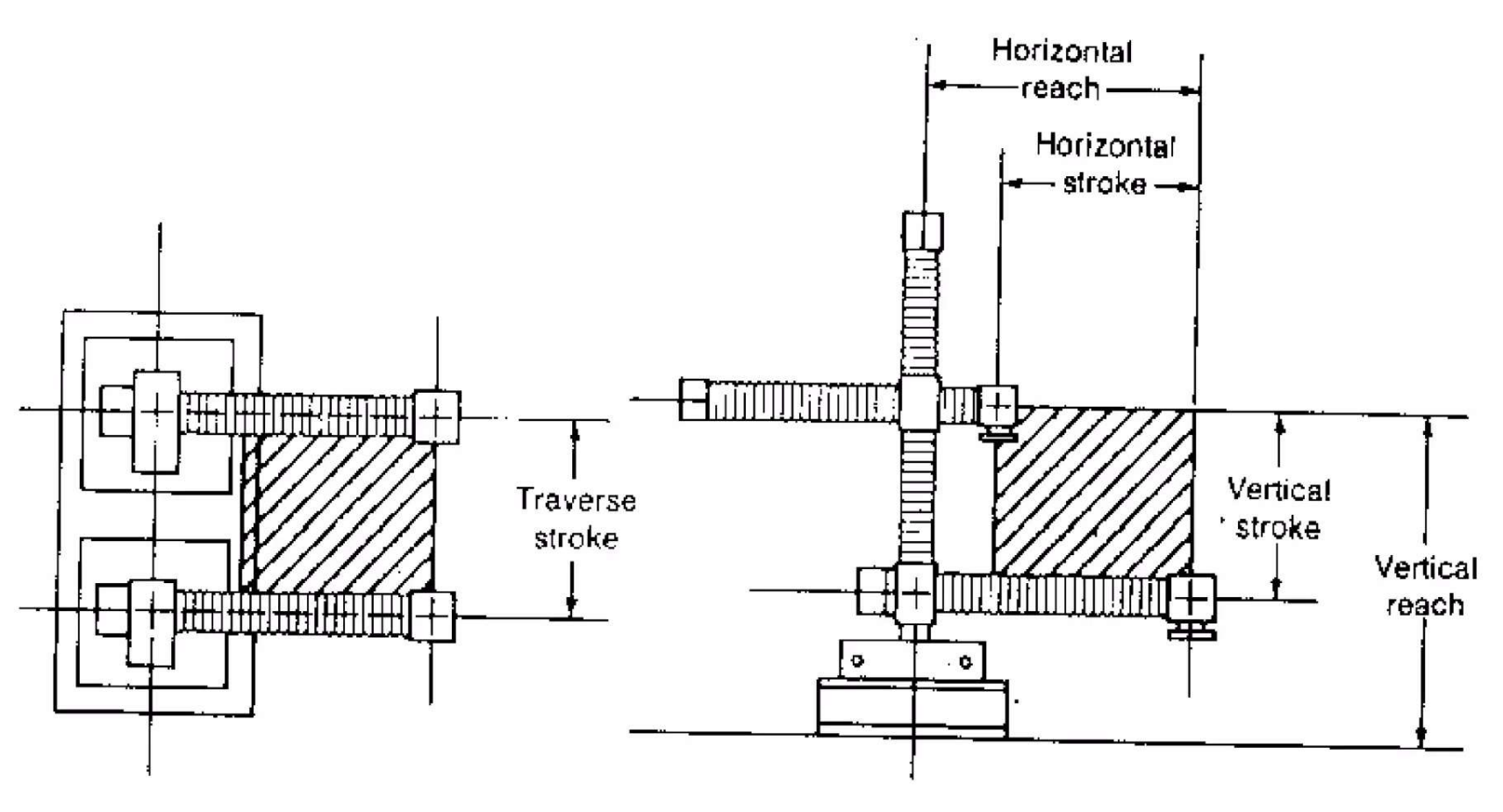

Symbolic Representation

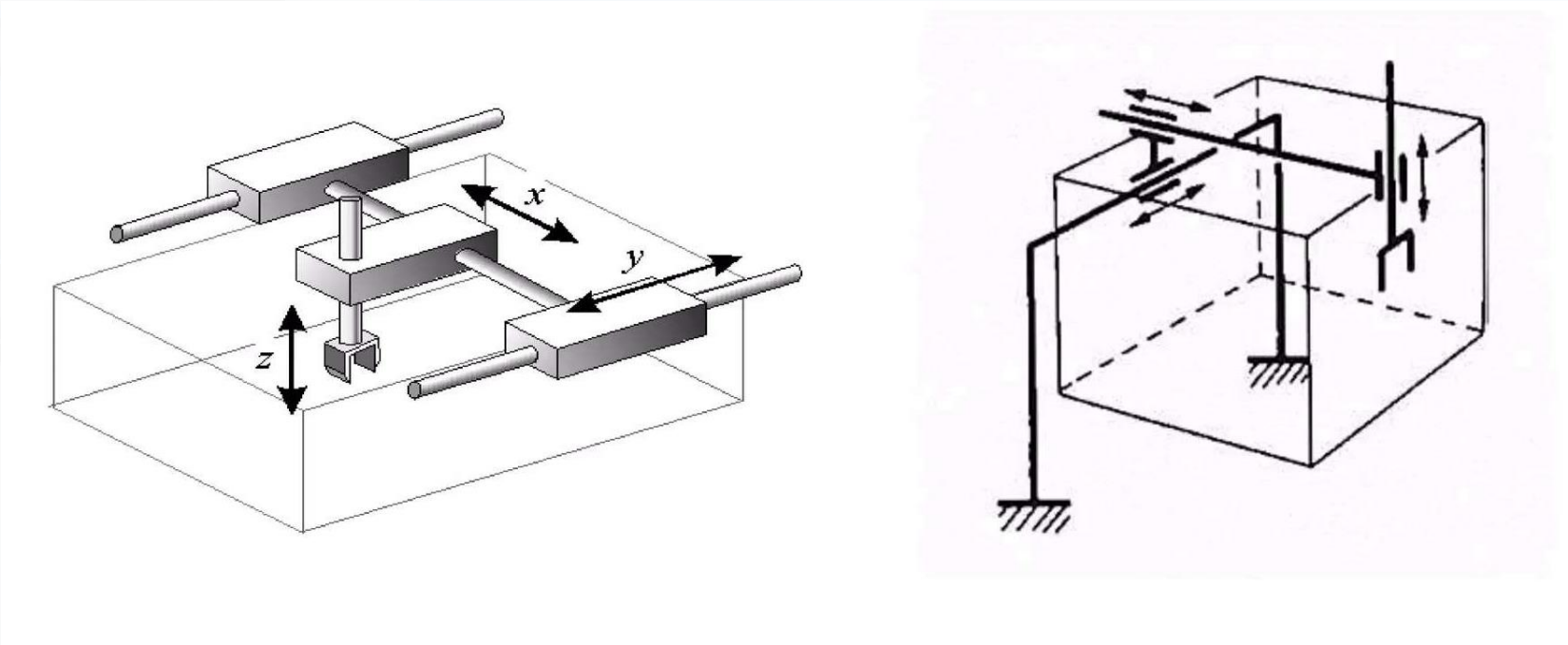

Orthogonal Coordinate type robot

Cylindrical Coordinate

- Consists of a vertical column, relative to which an arm assembly is moved up or down. The arm can be moved in or out relative to the column
- 1 Rotary, 2 prismatic movements
- Notation: **TLO**

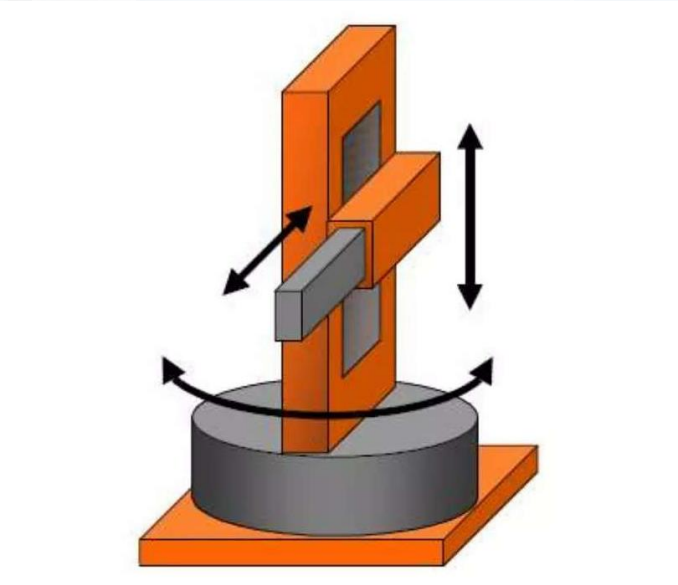

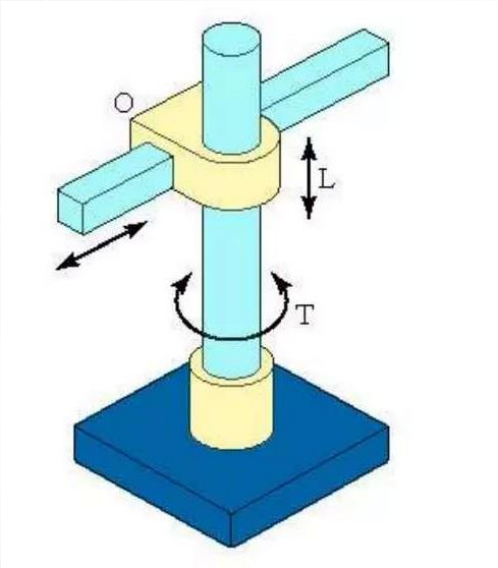

Cylindrical Robot Workspace

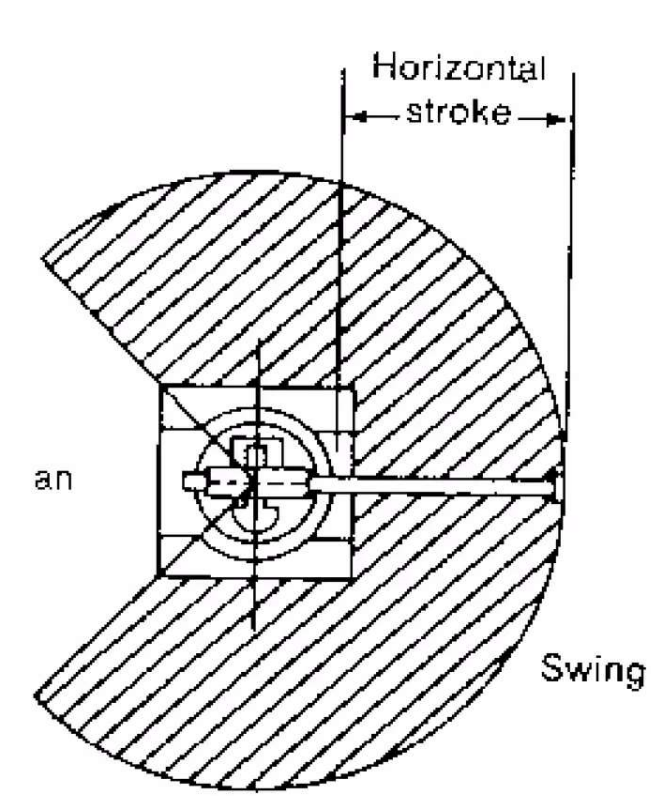

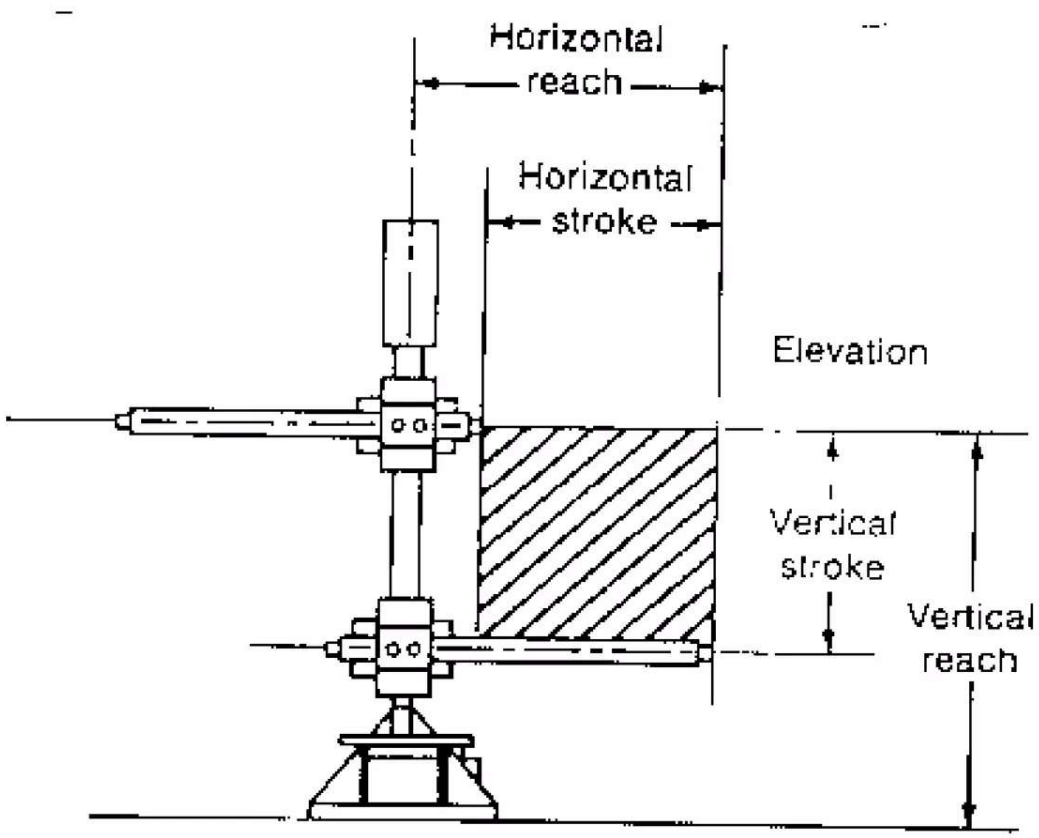

Symbolic Representation

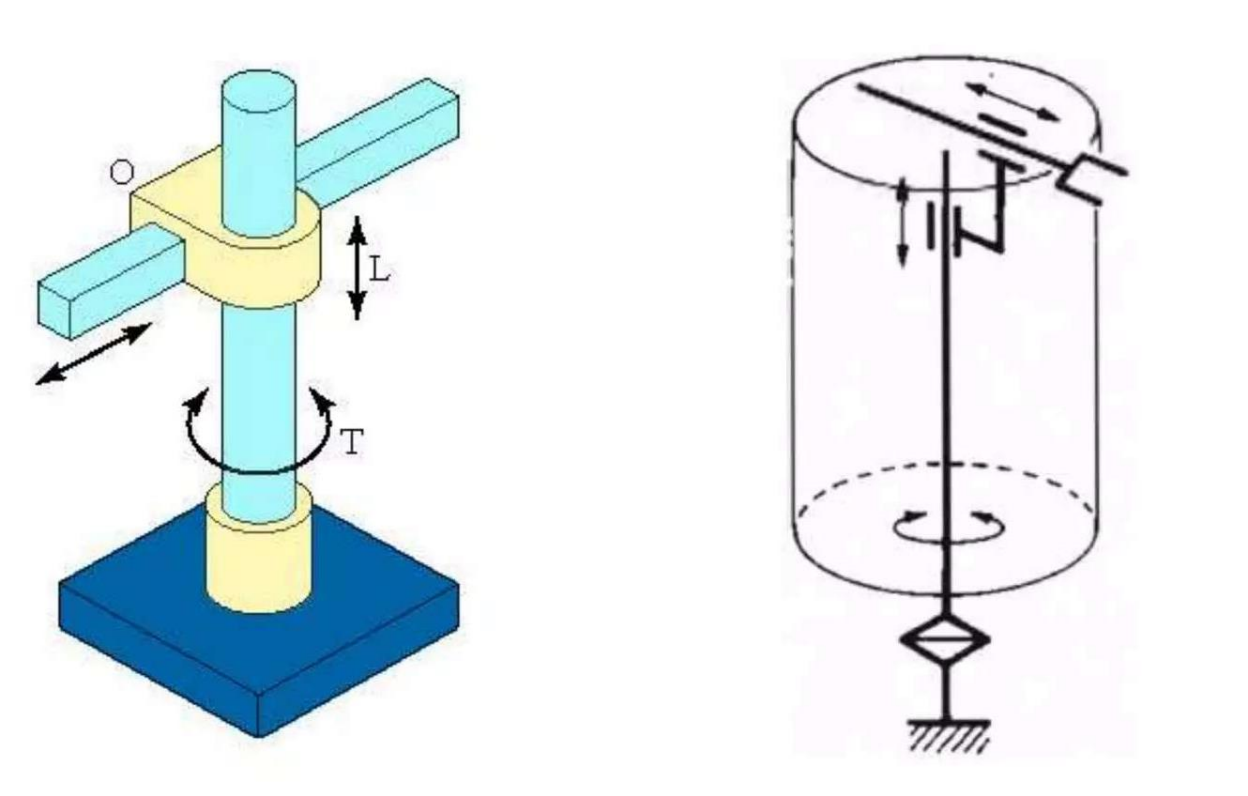

Polar / Spherical Coordinate

- Consists of a sliding arm(L joint) actuated relative to the body, which can rotate about both vertical axis (T joint) and horizontal axis (R joint)
- **Polar coordinates** are like the **2D version** of **spherical coordinates**
- 2 Rotary, 1 prismatic movements
- Notation: **TRL**

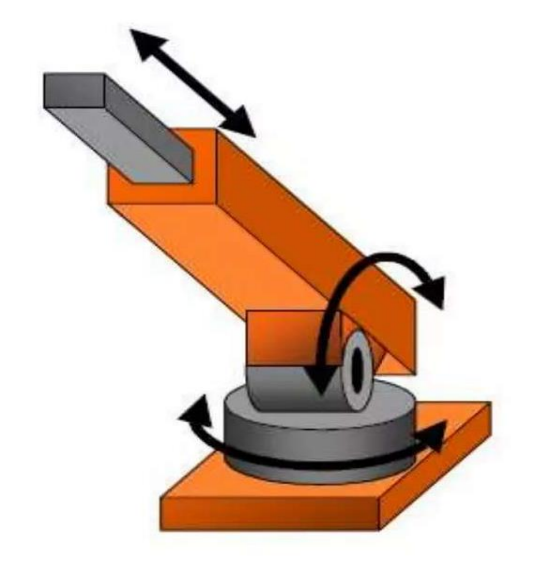

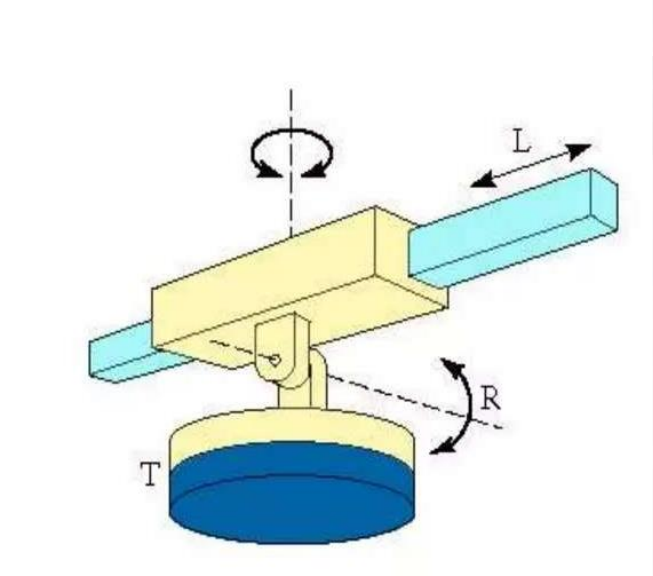

Polar / Spherical Robot Workspace

- Polar robots have a workspace of spherical shape

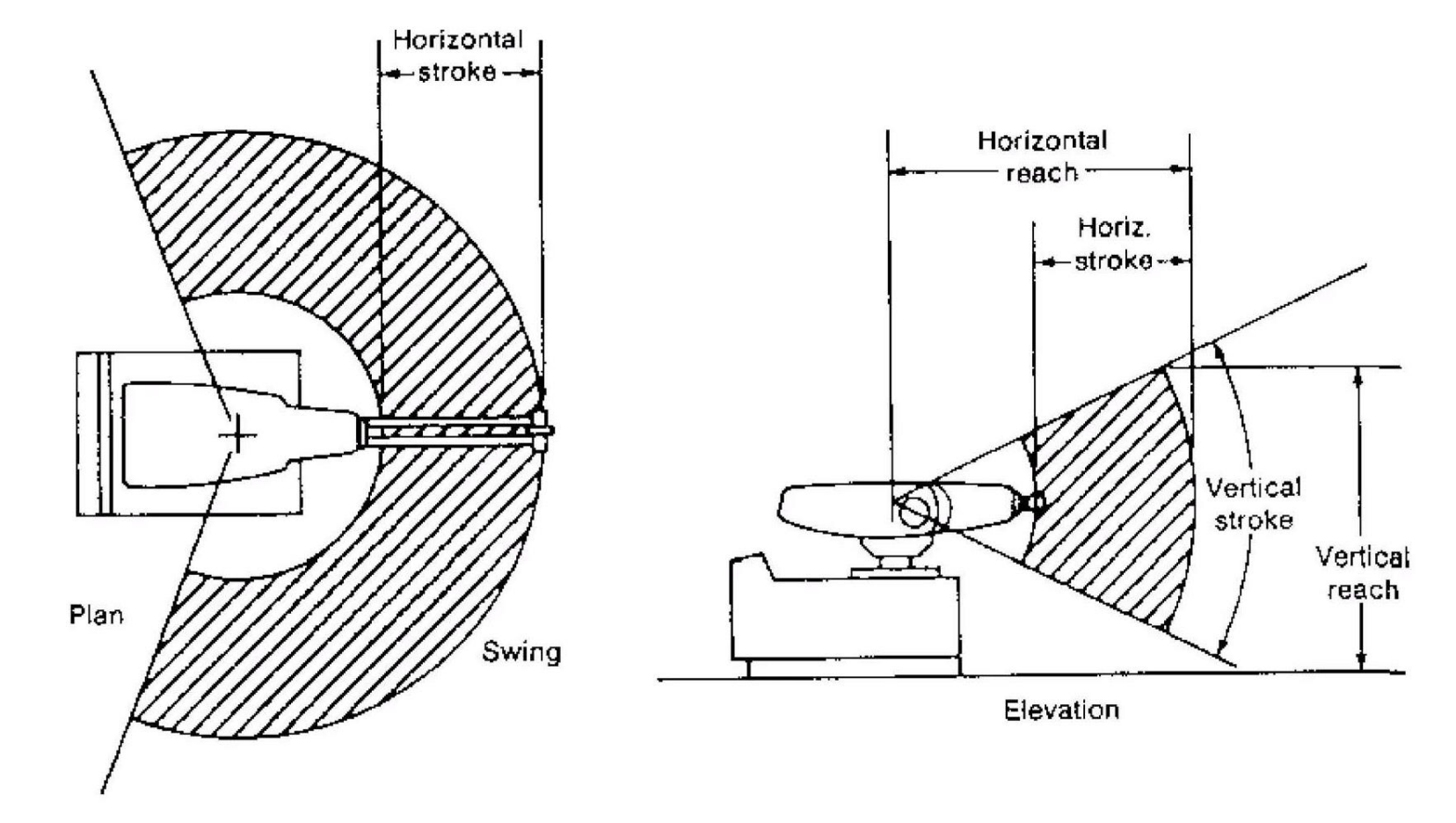

Symbolic Representation

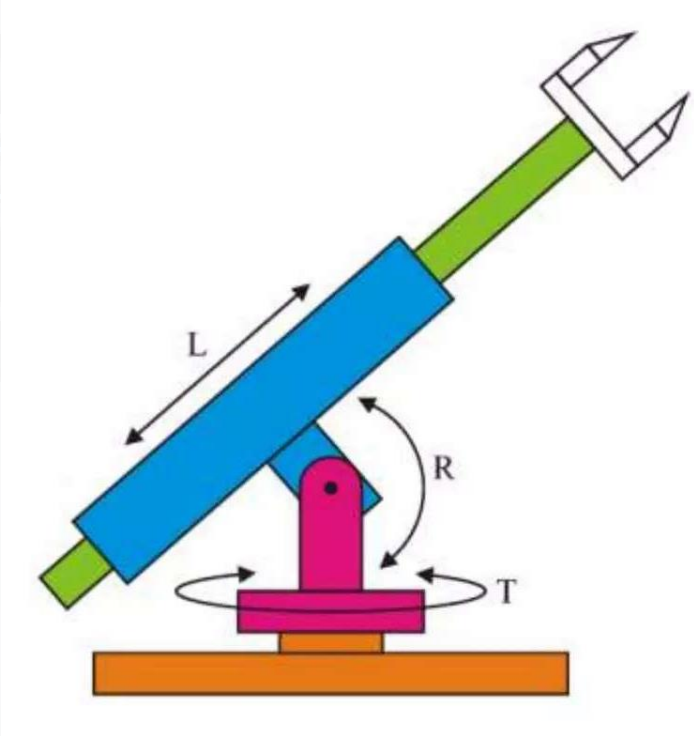

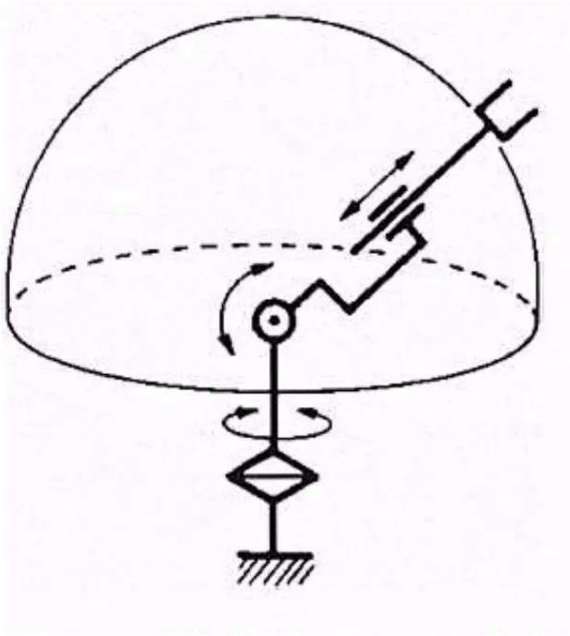

Jointed-Arm

- Combination of cylindrical and articulated configurations
- Articulated Robot: A robot with at least three rotary joints
- An articulated robot more closely resembles the human arm
- Notation:
  - ✓ TRL (Spherical Robot)
  - ✓ TRR (Articulated Robot)

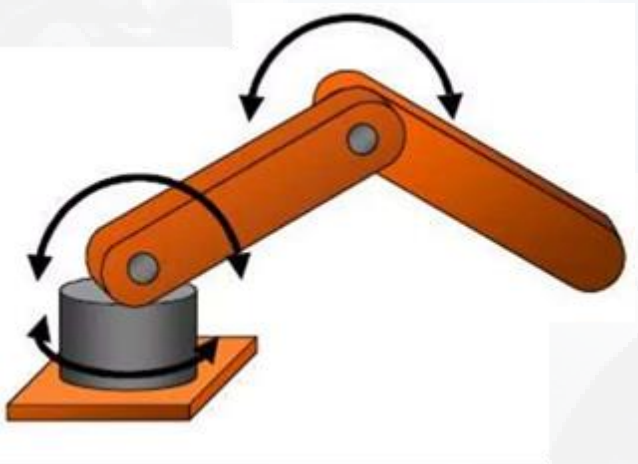

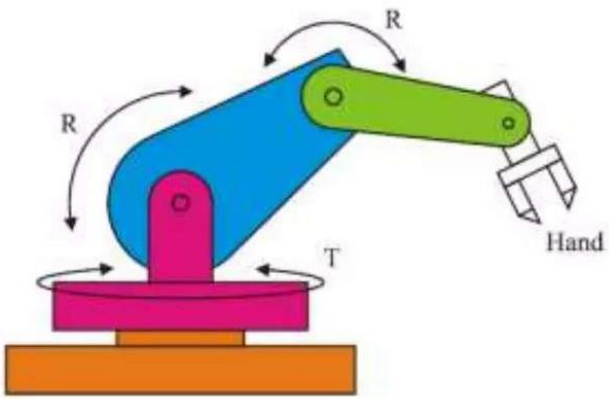

Jointed-Arm Robot Workspace

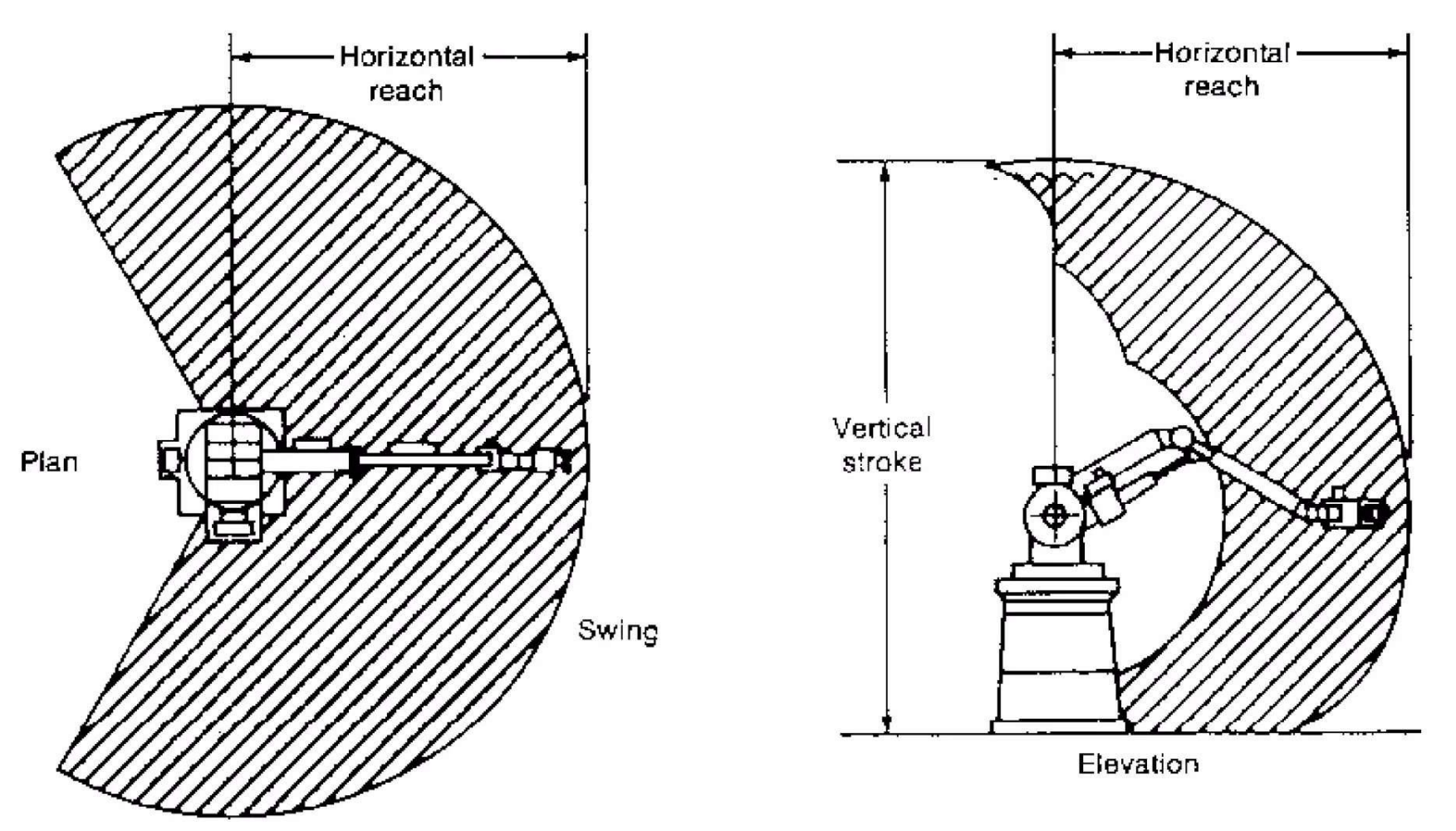

Symbolic Representation

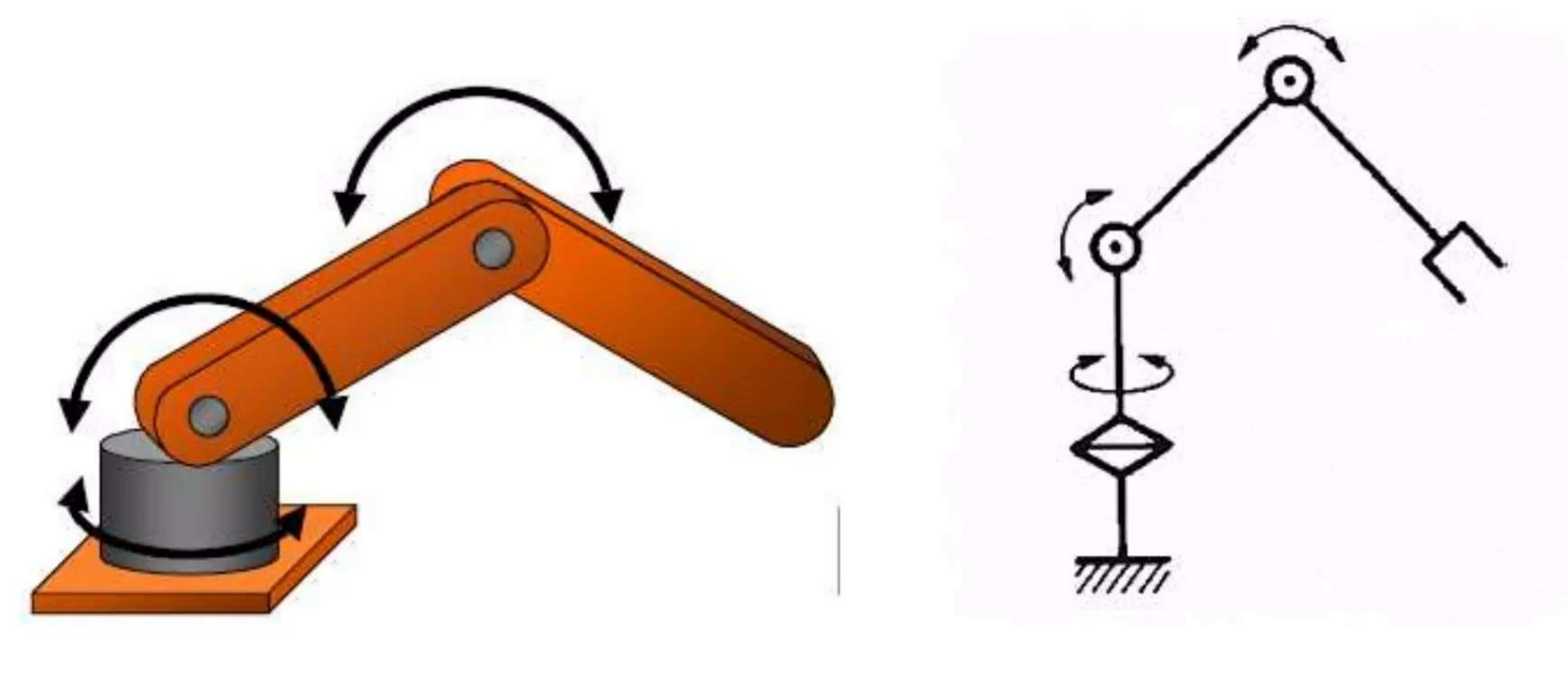

SCARA Robots

- SCARA stands for Selectively Compliant Assembly Robot Arm
- Similar to jointed-arm robot except that vertical axes are used for shoulder and elbow joints to be compliant in the horizontal direction for vertical insertion tasks
- Notation: **VRO, RRLT**

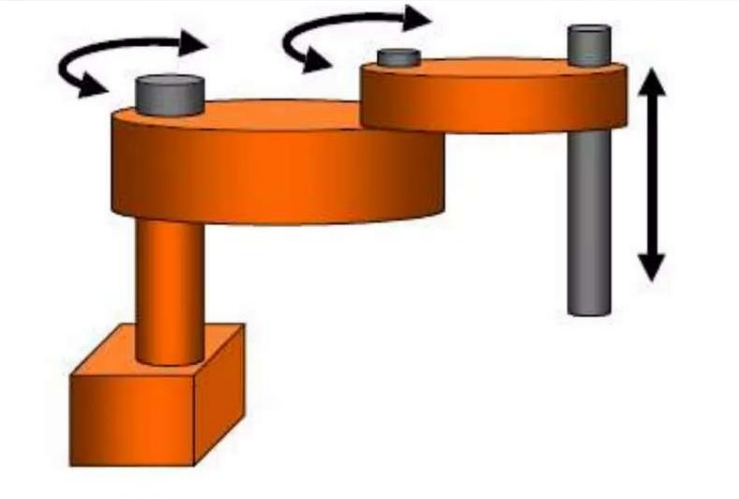

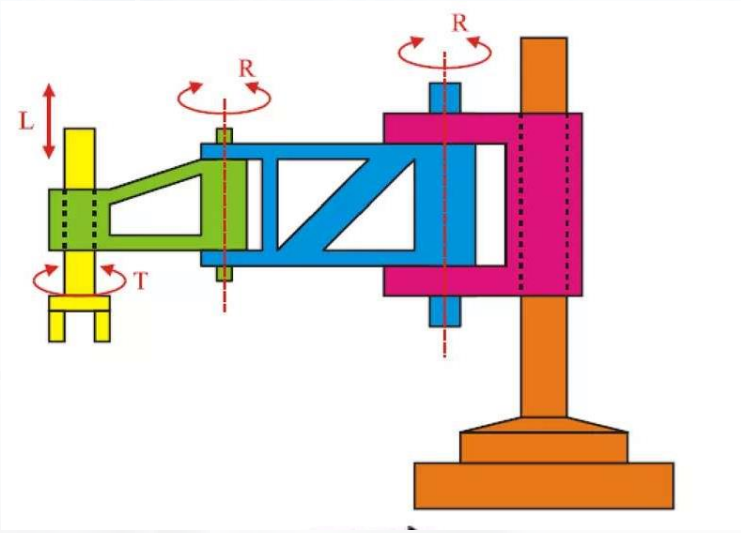

SCARA Robots

- A robot with at least two parallel rotary joints and an additional prismatic joint that moves vertically
- Commonly used for pick and place work, assembly operations

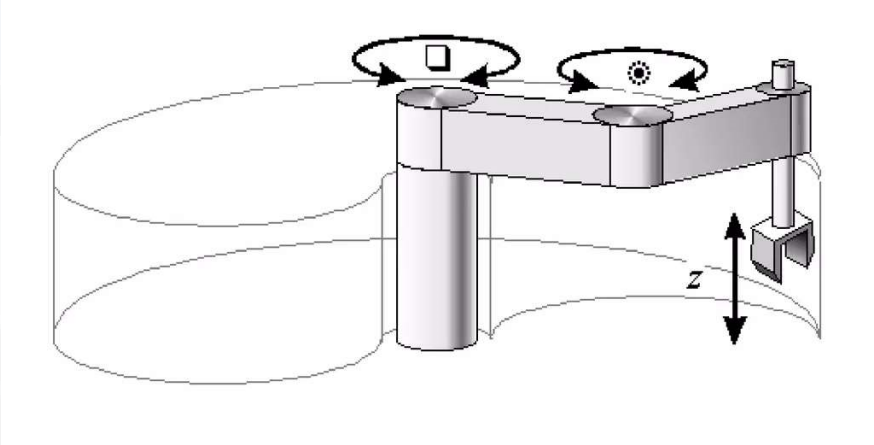

Symbolic Representation

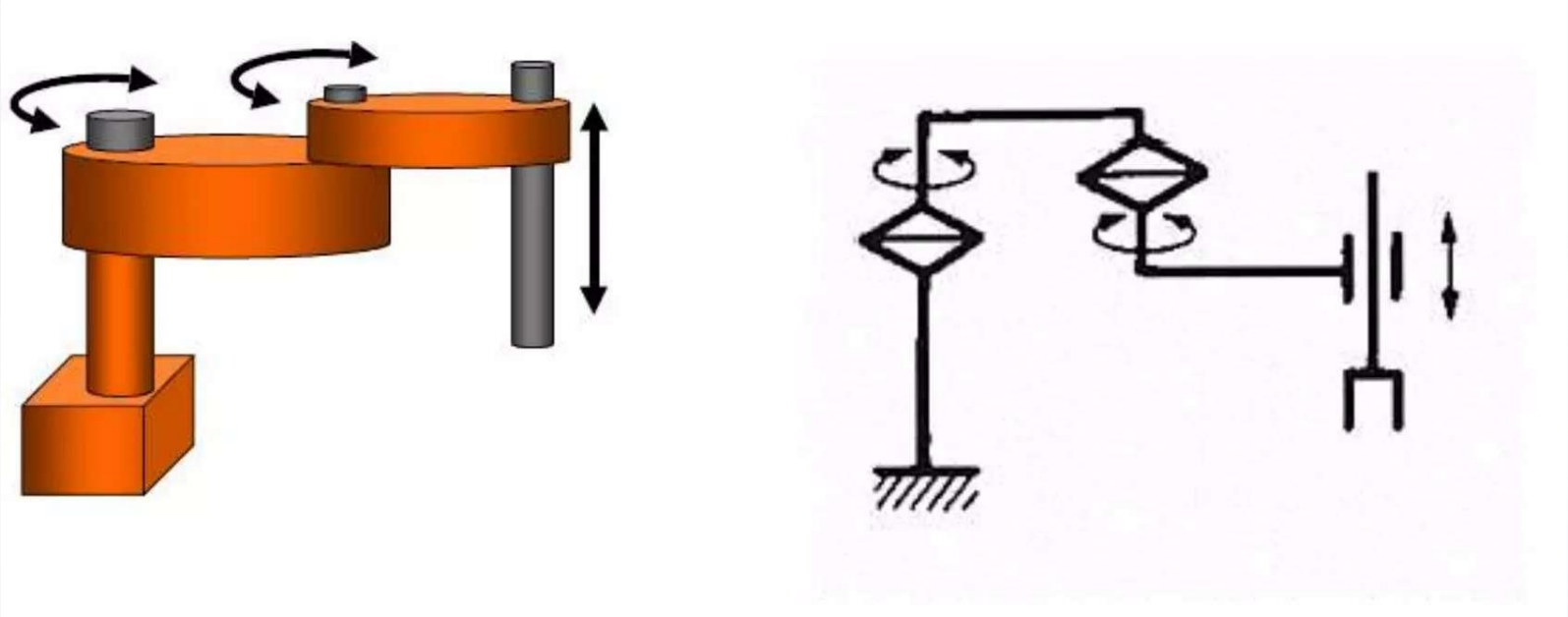

Robot Body and Arm Configurations

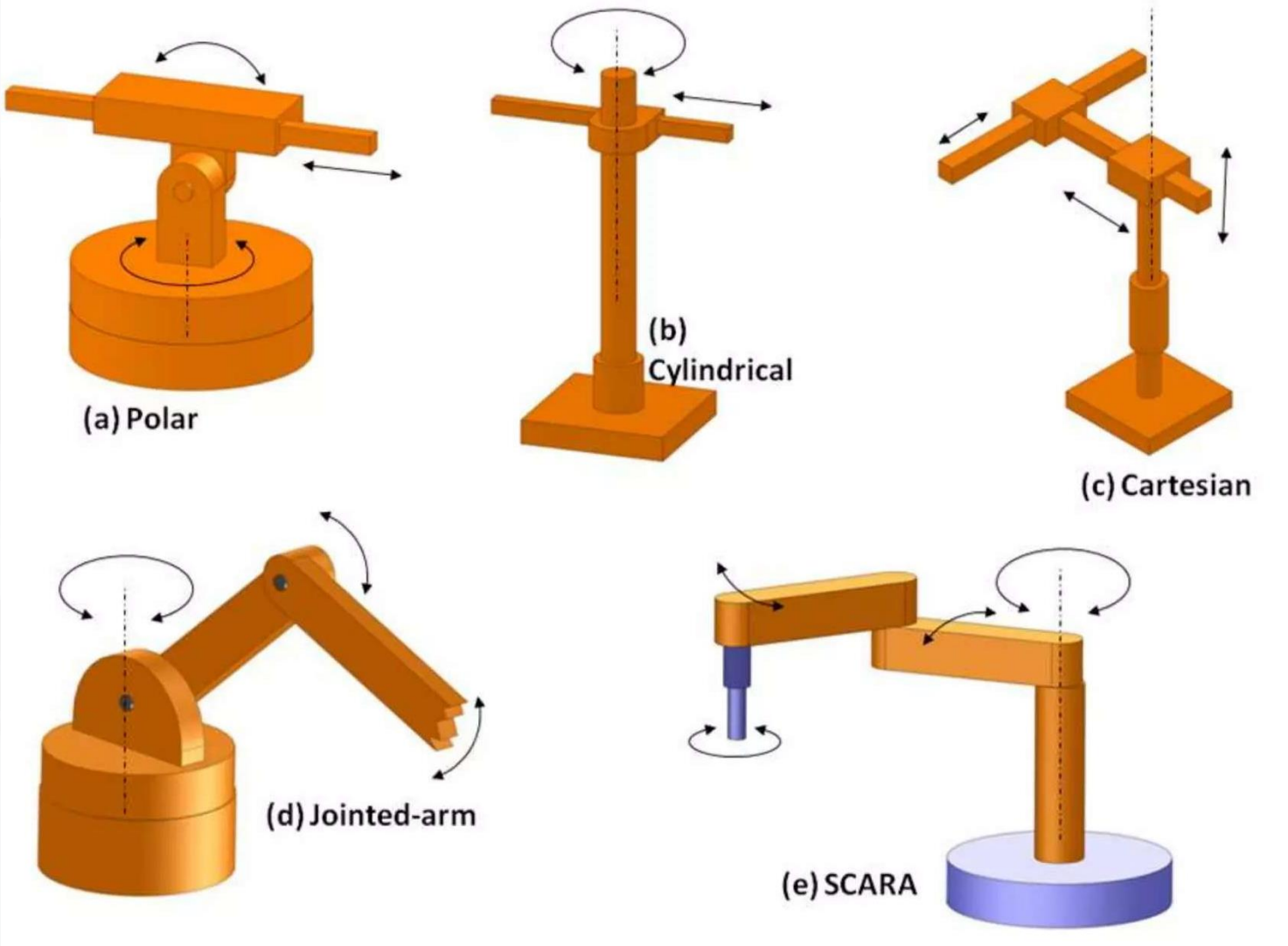

Robot Workspace

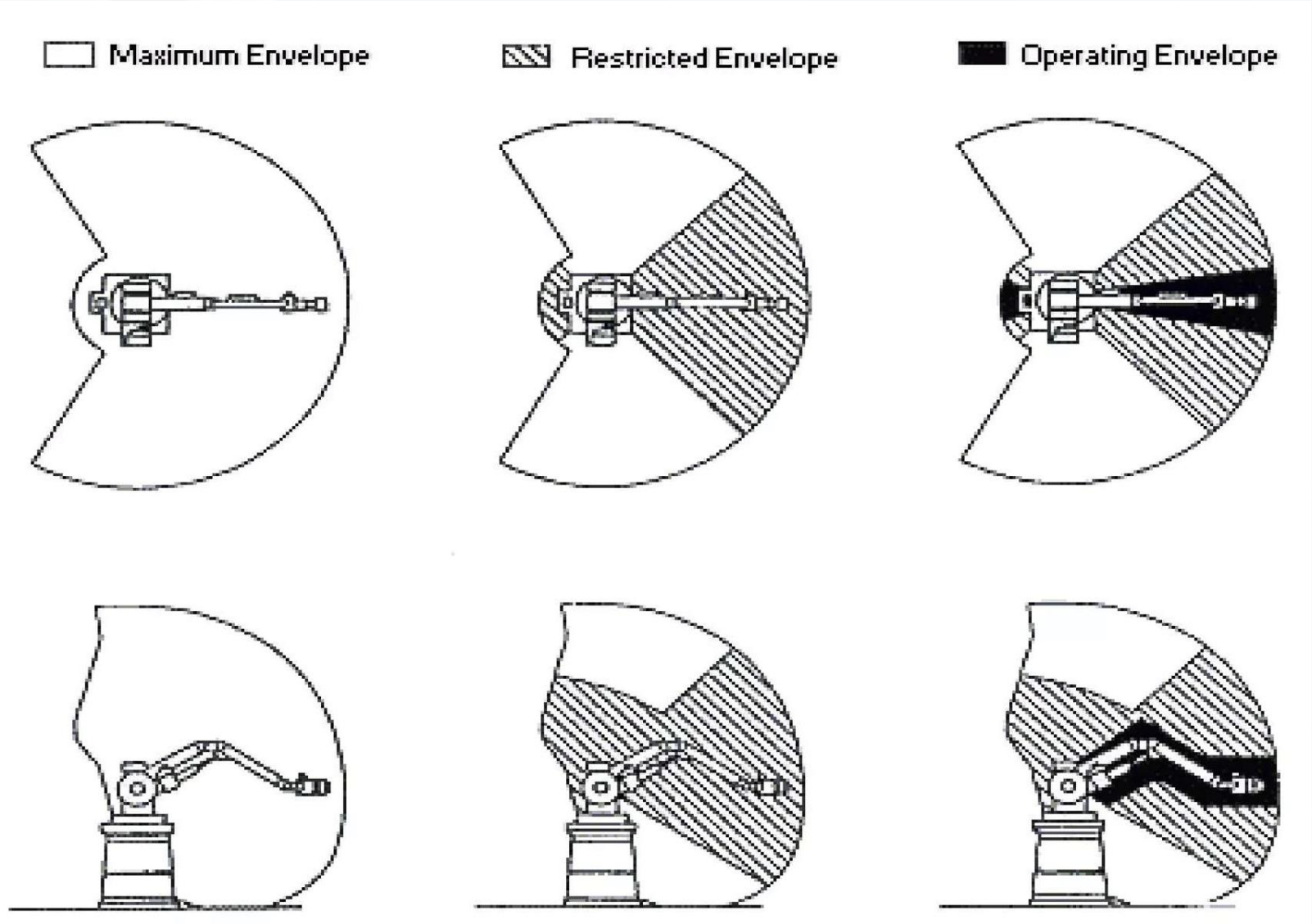

Advantages and Disadvantages

Configuration	Advantages	Disadvantages
Cartesian coordinates	3 linear axes, easy to visualize, rigid structure, easy to program	Can only reach front of itself, requires large floor space, axes hard to seal
Cylindrical coordinates	2 linear axes + 1 rotating, can reach all around itself, reach and height axes rigid, rotational axis easy to seal	Can't reach above itself, base rotation axis less rigid, linear axes hard to seal, won't reach around obstacles
SCARA coordinates	1 linear + 2 rotating axes, height axis is rigid, large work area for floor space	2 ways to reach point, difficult to program off-line, highly complex arm
Spherical coordinates	1 linear + 2 rotating axes, long horizontal reach	Can't reach around obstacles, short vertical reach
Revolute coordinates	3 rotating axes can reach above or below obstacles, largest work area for least floor space	Difficult to program off-line, 2 or 4 ways to reach a point, most complex manipulator

Wrist Configurations

- Wrist assembly is attached to end-of-arm
- End effector is attached to wrist assembly
- Function of wrist assembly is to orient the end effector
- Body-and-arm determines the global position of the end effector
- Two or three degrees of freedom:
  - Roll
  - Pitch
  - Yaw
- Notation: RRT

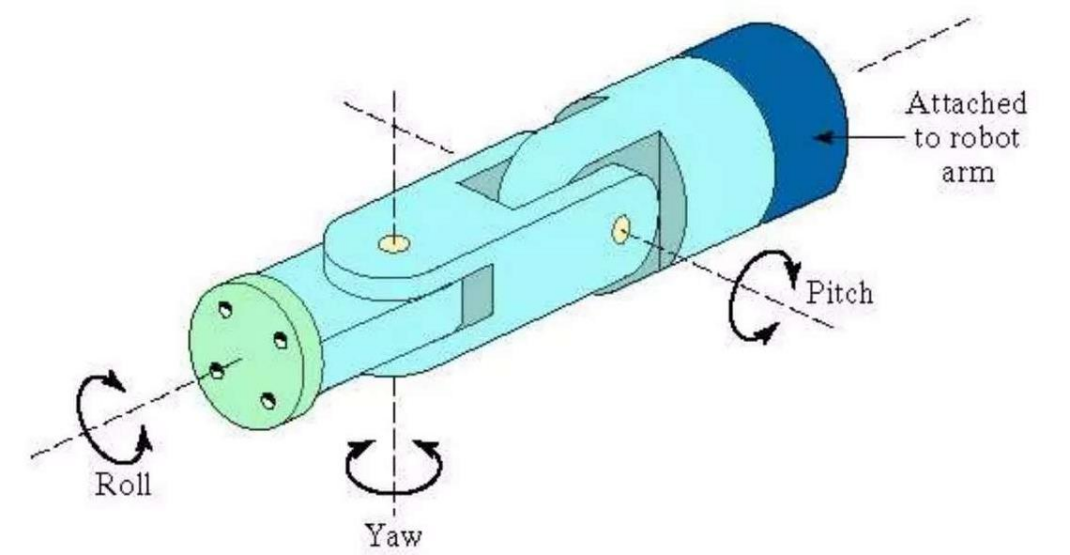

Six Basic Robot Motions

1. **Radial traverse:** Involve the extension and retraction (in or out movement) of the arm relative to the base.
2. **Vertical traverse:** Provide up-and-down motion of the arm.
3. **Rotational traverse:** Rotation of the arm about the vertical axis, such as the left-and-right swivel of the robot arm about a base.
4. **Wrist Pitch/Bend:** Provide up-and-down rotation to the wrist.
5. **Wrist Yaw:** Involve right-and-left rotation of the wrist.
6. **Wrist Roll/Swivel:** This is the rotation of the wrist about the arm axis.

Six Basic Robot Motions

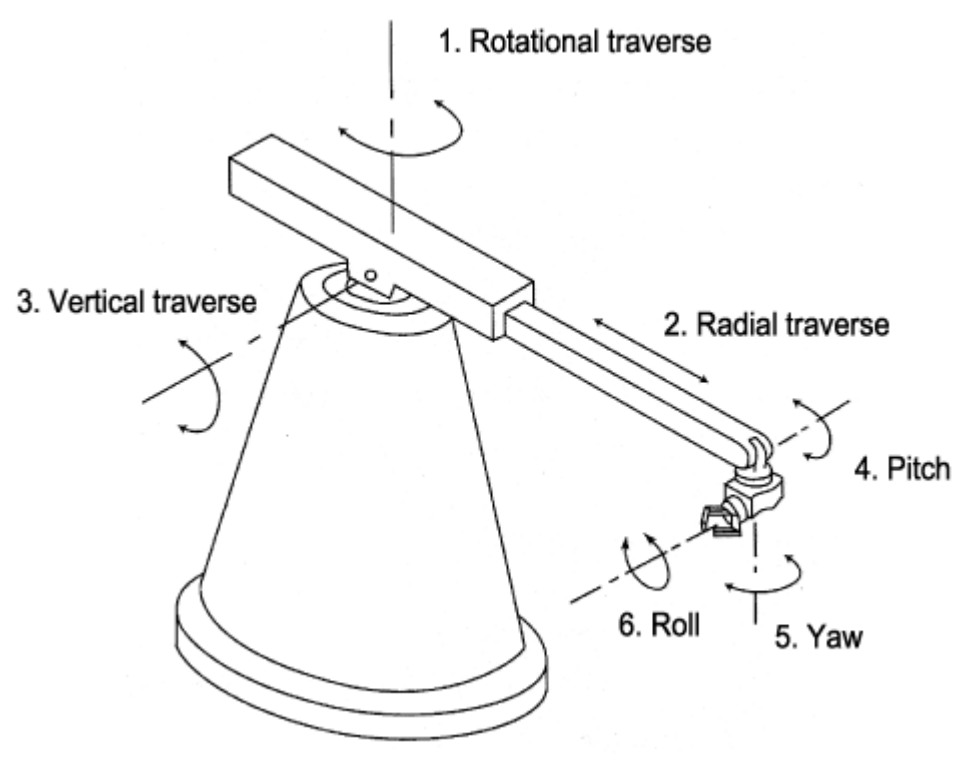

End Effectors

End-effectors are the tools attached to the end of the robot arm that enable it to do useful work. Typically, the end-effectors must be purchased or designed separately. Also called end-of-arm-tooling, end-effectors are usually attached to the robot tool plate (after the last wrist joint). Like robots themselves, end-effectors require a power source, often electric or pneumatic.

Grippers:

Grippers are the most common end-effectors. They allow the robot to grasp necessary parts and manipulate them.

- Mechanical grippers: consisting of two or more fingers that can be actuated by the robot controller to open and close to grasp the work-piece.
- Vacuum grippers: such cups are used to hold flat objects.
- Magnetized devices: for holding ferrous work-pieces.
- Adhesive devices: where adhesive substances are used to hold flexible materials like fabric.
- Simple mechanical devices: such as hooks, nails and scoops.

End Effectors

mechanical grippers		suction grippers	magnetic grippers	adhesive grippers	nail grippers
scissors gripper	fork gripper		electromagnet	adhesive foil	
			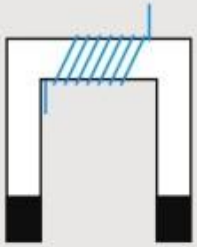		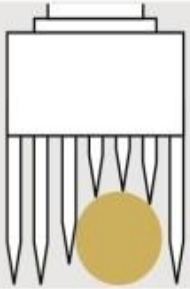
parallel jaw gripper	three-point gripper		permanent magnet		
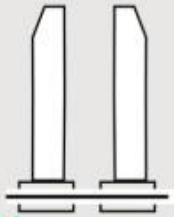			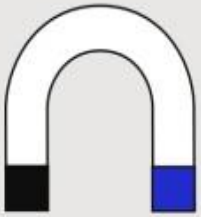		

e334

Various types of grippers

End Effectors

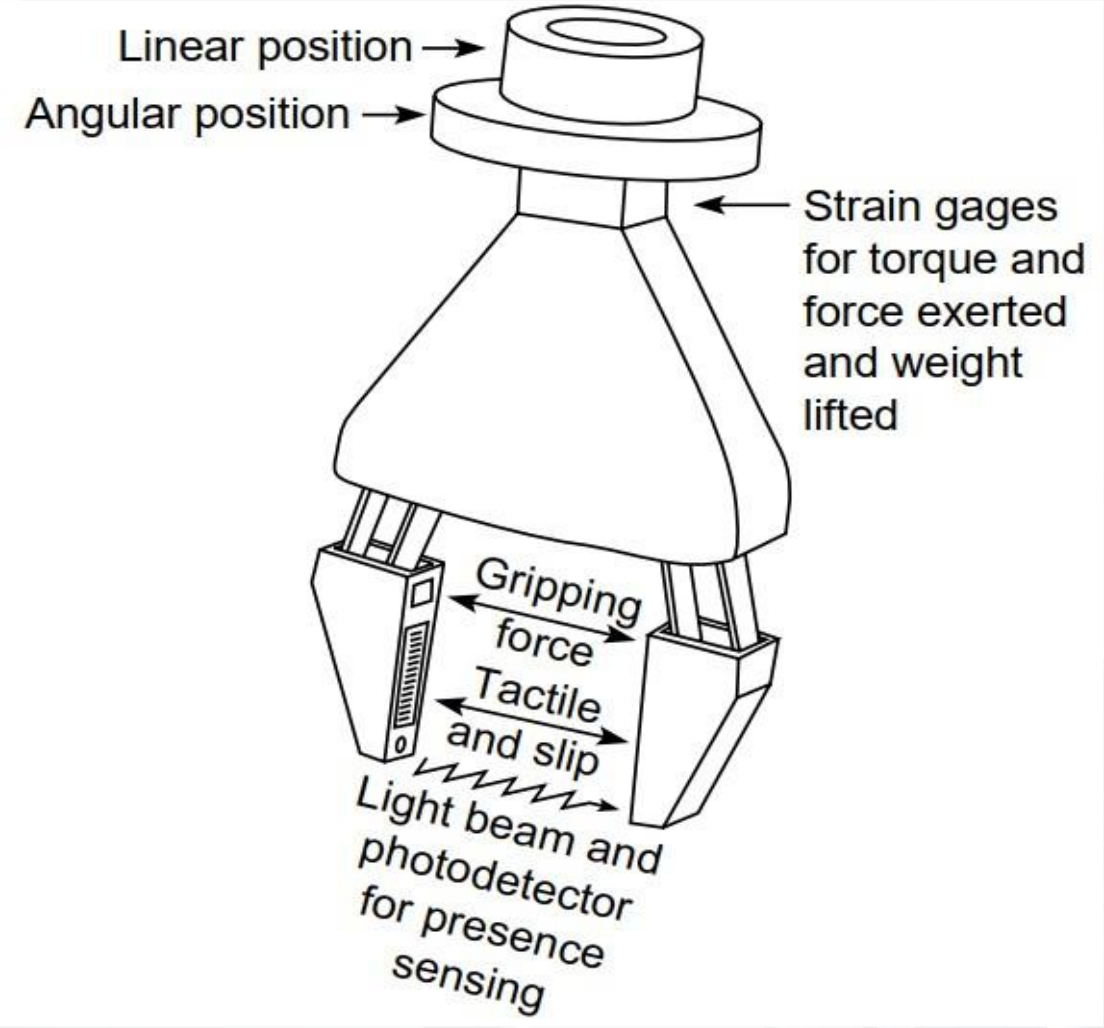

A very common mechanical gripper consisting of two ‘fingers’

End Effectors

A mechanical gripper made by imitating a human hand. It is still far from being developed completely to grab any type of object. Not used in industries

End Effectors

Machine Tools: Robot end-effectors can also be machine tools such as drills, grinding wheels, cutting wheels, etc.

Laser and Water Jet Cutters: Laser and water jet cutters are robot end-effectors that use high-intensity laser beams or high-pressure abrasive water jets to cut sheet metal or fiberglass parts to shape.

Spray Painting Tools: Automatic spray painting is a useful application for robots, in the automotive and other industries.

Measuring Instruments: Measuring instruments are end-effectors that allow the robot to precisely measure parts by running the arm lightly over the part using a measuring probe or gauge.

Actuators

An **actuator** is a device in robotics (and other mechanical systems) that converts energy—typically electrical, hydraulic, or pneumatic—into **mechanical motion**. It is the component responsible for moving or controlling a mechanism or system.

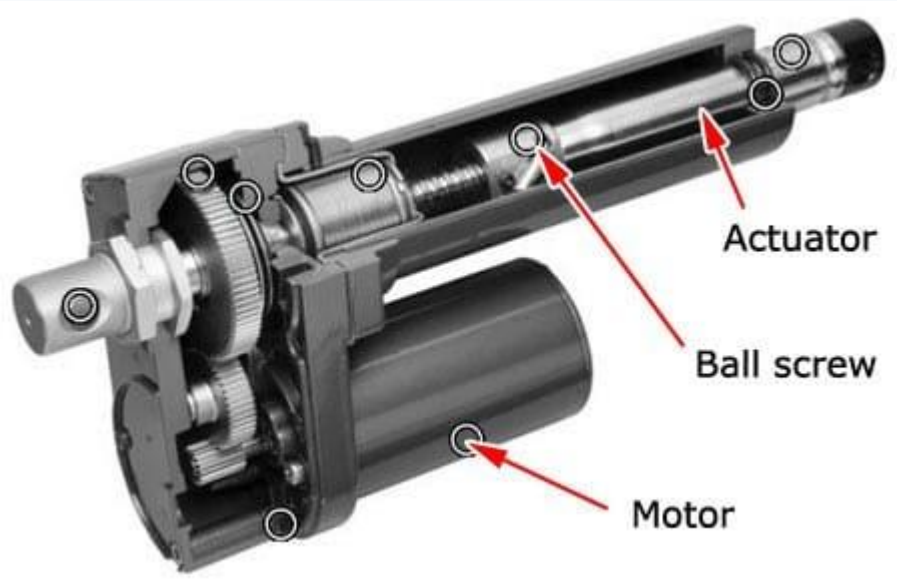

Types of Actuators in Robotics

- **Electric Actuators**
  - Powered by electric motors
  - Precise and clean
  - Common in small- to medium-sized robots
- **Hydraulic Actuators**
  - Use pressurized fluid
  - High force output
  - Ideal for heavy-duty robots (e.g., industrial arms)
- **Pneumatic Actuators**
  - Use compressed air
  - Fast and lightweight
  - Often used in pick-and-place robots
- **Piezoelectric Actuators**
  - Tiny displacements with high precision
  - Used in micro-robots or fine adjustments

Processor

Processor is the **central control unit** that interprets input signals (from sensors or user commands) and sends instructions to actuators and other components. It functions like the **brain** of the robot.

Key Roles of a Processor in Robotics:

- **Data Processing**: Collects and processes data from sensors.
- **Decision Making**: Executes control algorithms (e.g., PID control, path planning).
- **Command Execution**: Sends commands to motors and actuators.
- **Communication**: Interfaces with other devices, networks, or users.

Types of Processors

- **Microcontrollers (MCUs)**
  - Example: Arduino, STM32
  - Lightweight and ideal for simple robots
- **Microprocessors (MPUs)**
  - Example: Raspberry Pi, Intel Core i-series
  - More powerful, can run full operating systems (e.g., Linux)
- **Digital Signal Processors (DSPs)**
  - Specialized for real-time signal processing (used in vision and audio tasks)
- **Field Programmable Gate Arrays (FPGAs)**
  - Highly customizable, fast, and parallel processing (used in high-performance robotics)

Controller

- Robot control can be of the following types based on a feedback system.
  - Open loop control: Signal is sent based on the current state without taking into account feedback from the system
  - Closed loop control: Feedback is taken from the system, and the signal is sent accordingly.
  - Hybrid control: consists of open loop and closed loop chains.

Open loop control:

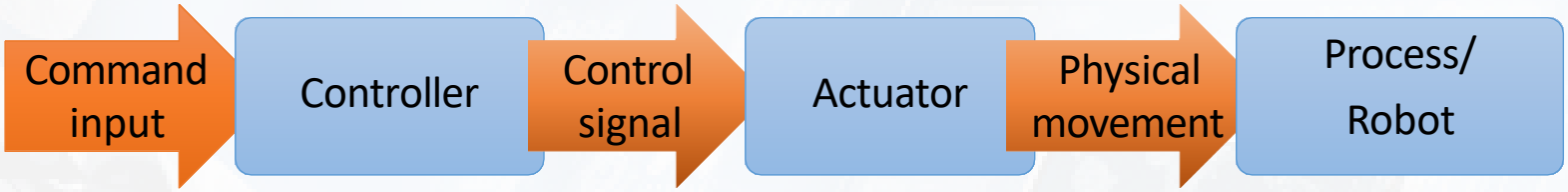

Closed loop control:

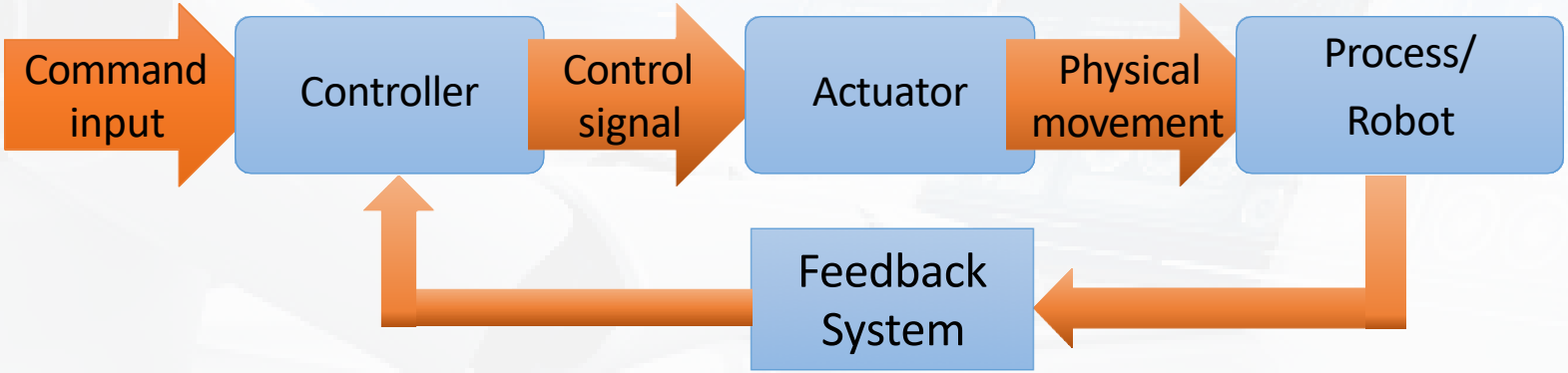

Controller

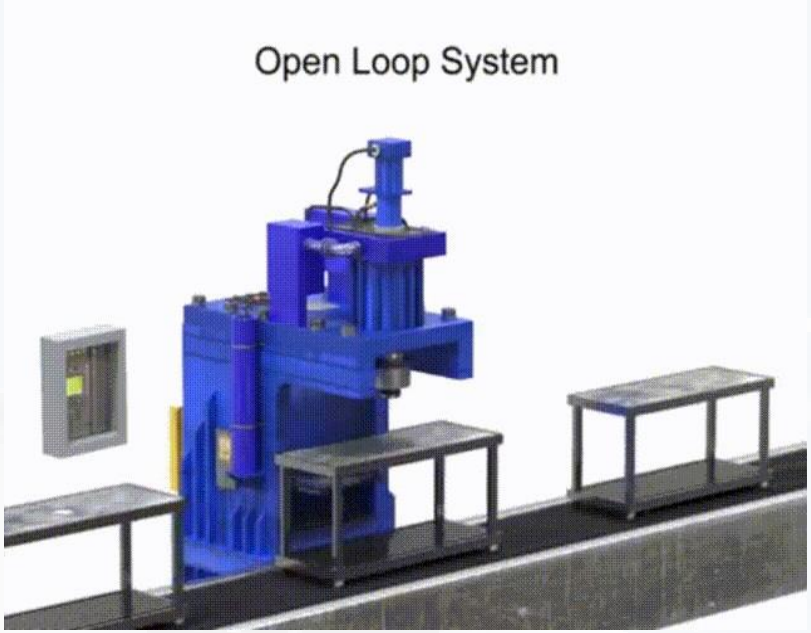
Open Loop System

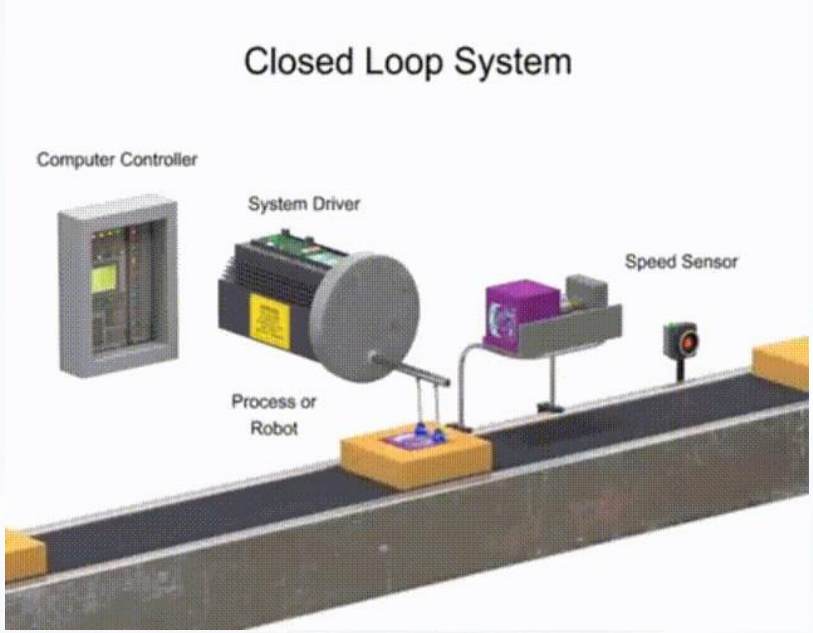
Closed Loop System
Computer Controller
System Driver
Speed Sensor
Process or
Robot

Sensor

Sensors are essential components that allow a robot to perceive and interact with its environment. They provide data about surroundings, position, orientation, force, and more—much like human senses.

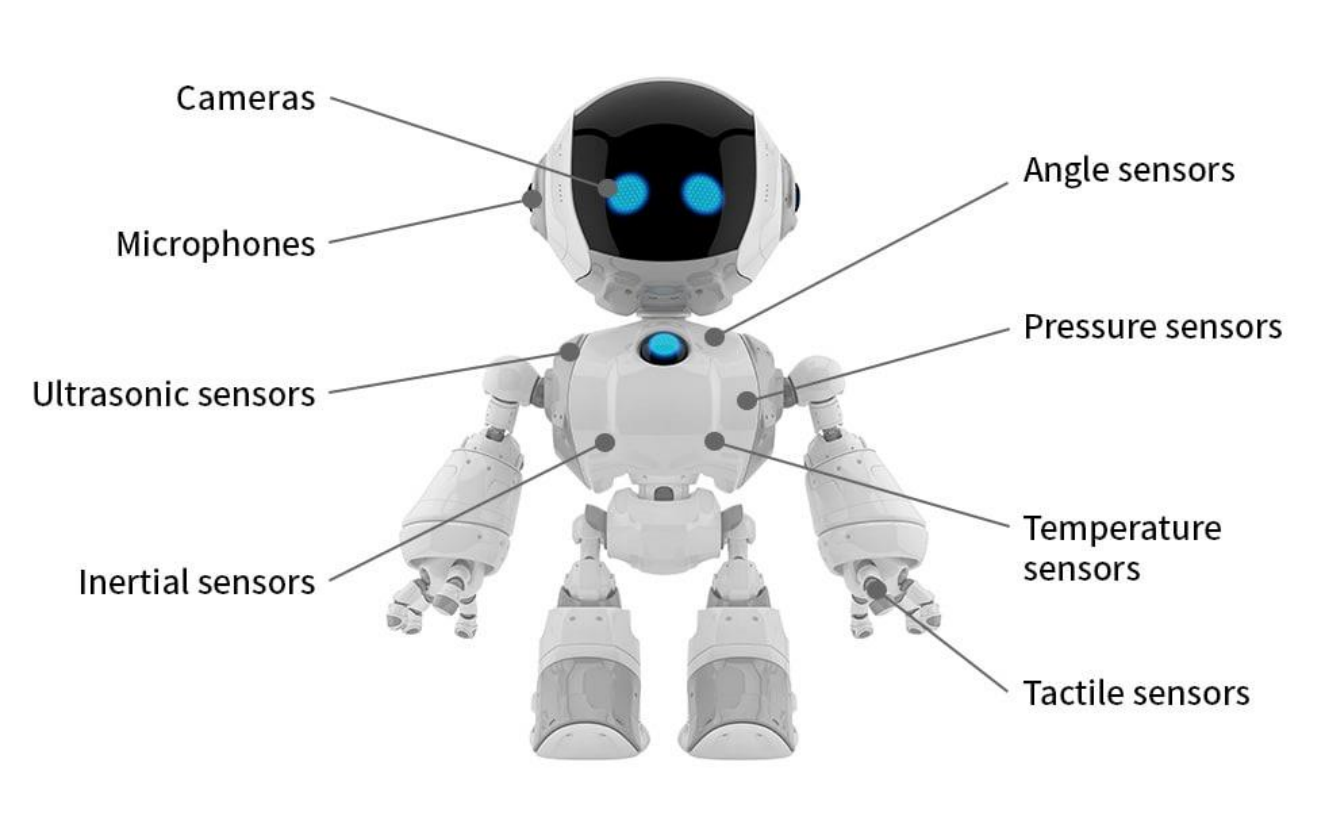

Software

The **software of a robot** is the collection of programs, algorithms, and systems that control how the robot behaves, senses, moves, and interacts with its environment. Just as hardware gives a robot its physical body, software gives it **intelligence and control**.

@IEEE

Robot Programming Modes

- Physical setup: An operator sets up switches and hard stops that control the motion. This mode is usually used along with other devices such as programmable logic controllers (PLCs).
- Teach Programming: Move the robot to required task positions via the teach pendant; the computer memorizes these configurations and plays them back in the robot motion sequence. The teach pendant is a controller box that allows the human operator to position the robot by manipulating the buttons on the box. This type of control is adequate for simple, non-intelligent tasks.
- Lead-Through Programming: The human operator physically grabs the end-effector and shows the robot exactly what motions to make for a task while the computer memorizes the motions (memorizing the joint positions, lengths, and/or angles to be played back during the task execution).
- Software mode: A program is written which is then executed by the controller to control the motion of the robot.

Robot Specifications

- Payload: This is the weight a robot can carry remaining within its other specifications. As an example, a robot's maximum load capacity may be much larger than its specified payload, but at these levels, it may become less accurate, may not follow its intended path (trajectory) accurately, or may have excessive deflections.
- Reach: This is the maximum distance a robot can reach within its work envelope. It is a function of the robot's joint lengths, linkages, and configuration. This is an important specification for industrial robots and must be considered before a robot is selected and installed.
- Speed: Speed is the amount of distance per unit of time at which the robot can move, usually specified in inches per second or meters per second. The speed is usually specified at a specific load or assuming that the robot is carrying a fixed weight. Actual speed may vary depending on the weight carried by the robot.

Robot Specifications

- Accuracy: Accuracy is the ability of a robot to go to the specified position without making a mistake. It is impossible to position a machine exactly. Accuracy is therefore defined as the ability of the robot to position itself to the desired location with the minimal error.

- Repeatability: Repeatability is the ability of a robot to repeatedly position itself when asked to perform a task multiple times.

- Accuracy is an absolute concept, repeatability is relative. Note that a robot that is repeatable may not be very accurate. Similarly, an accurate robot may not be repeatable.

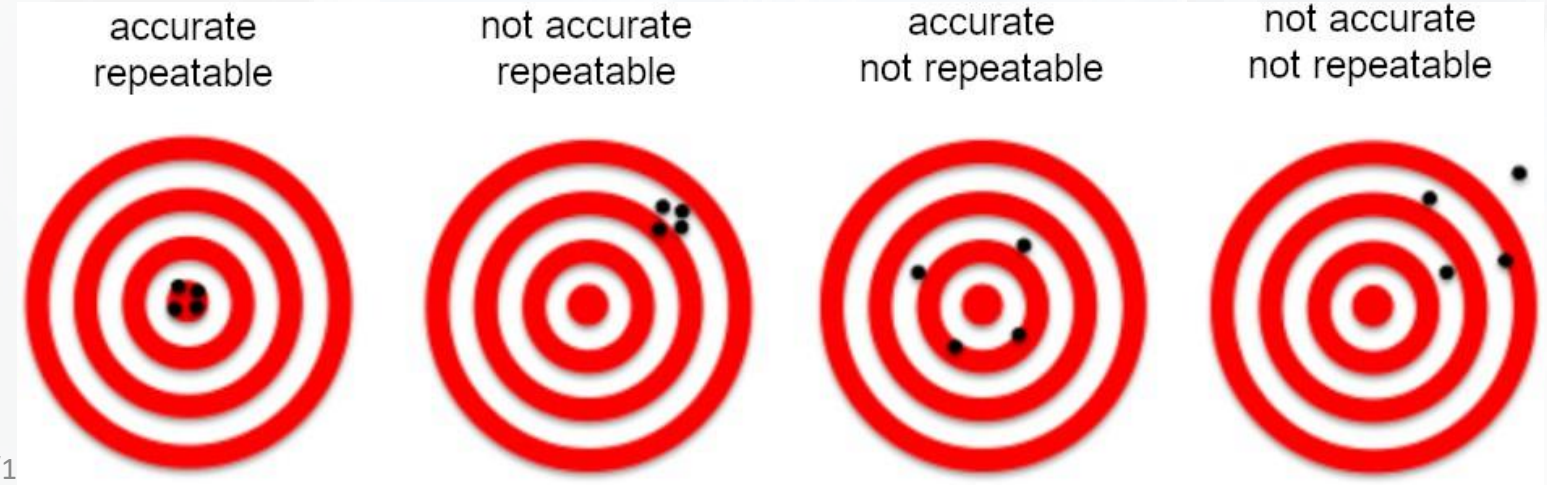

Thank You