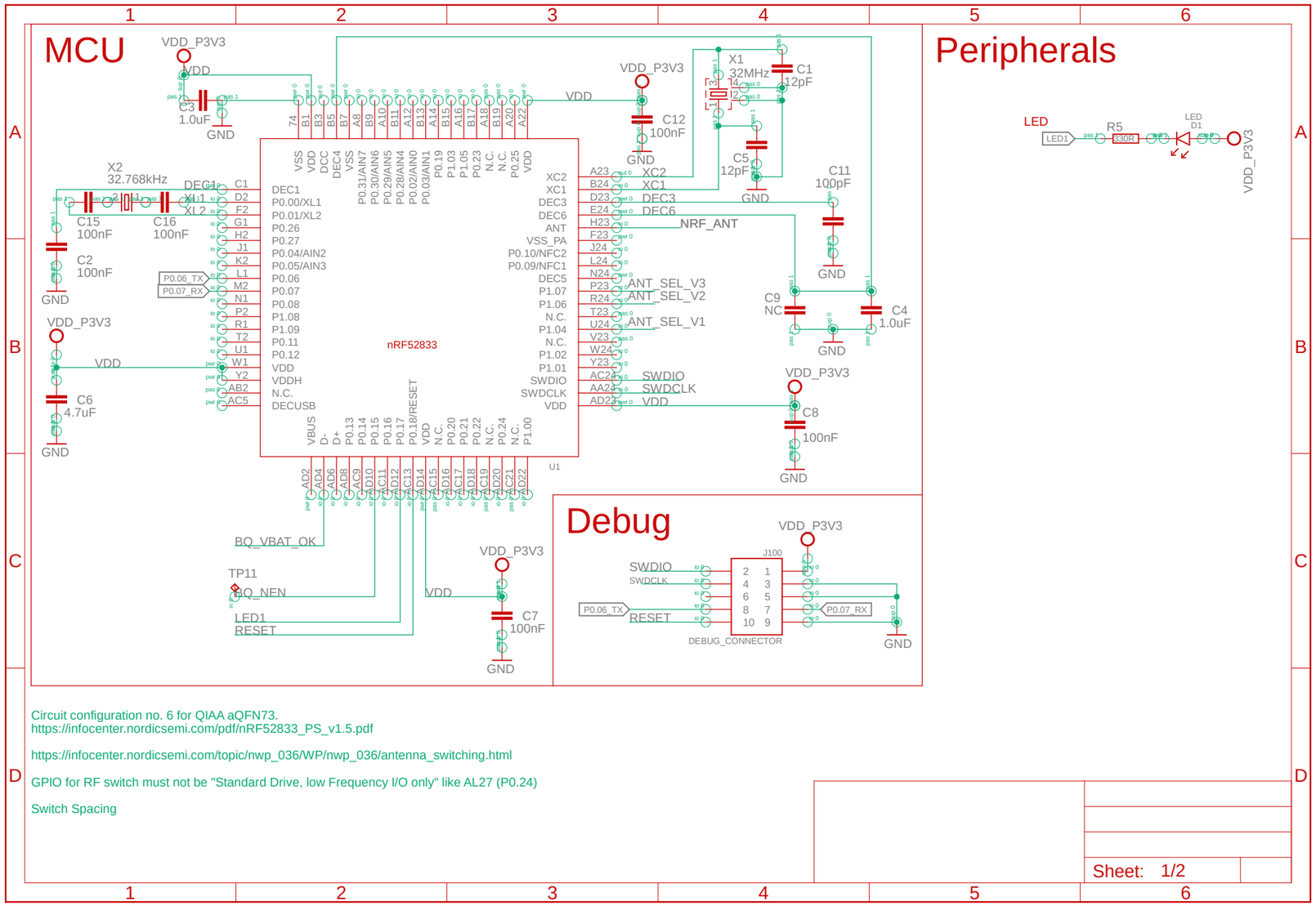

Circuit configuration no. 6 for QIAA aQFN73.
https://infocenter.nordicsemi.com/pdf/nRF52833_PS_v1.5.pdf

https://infocenter.nordicsemi.com/topic/nwp_036/WP/nwp_036/antenna_switching.html

GPIO for RF switch must not be "Standard Drive, low Frequency I/O only" like AL27 (P0.24)

Switch Spacing

Sheet: 1/2

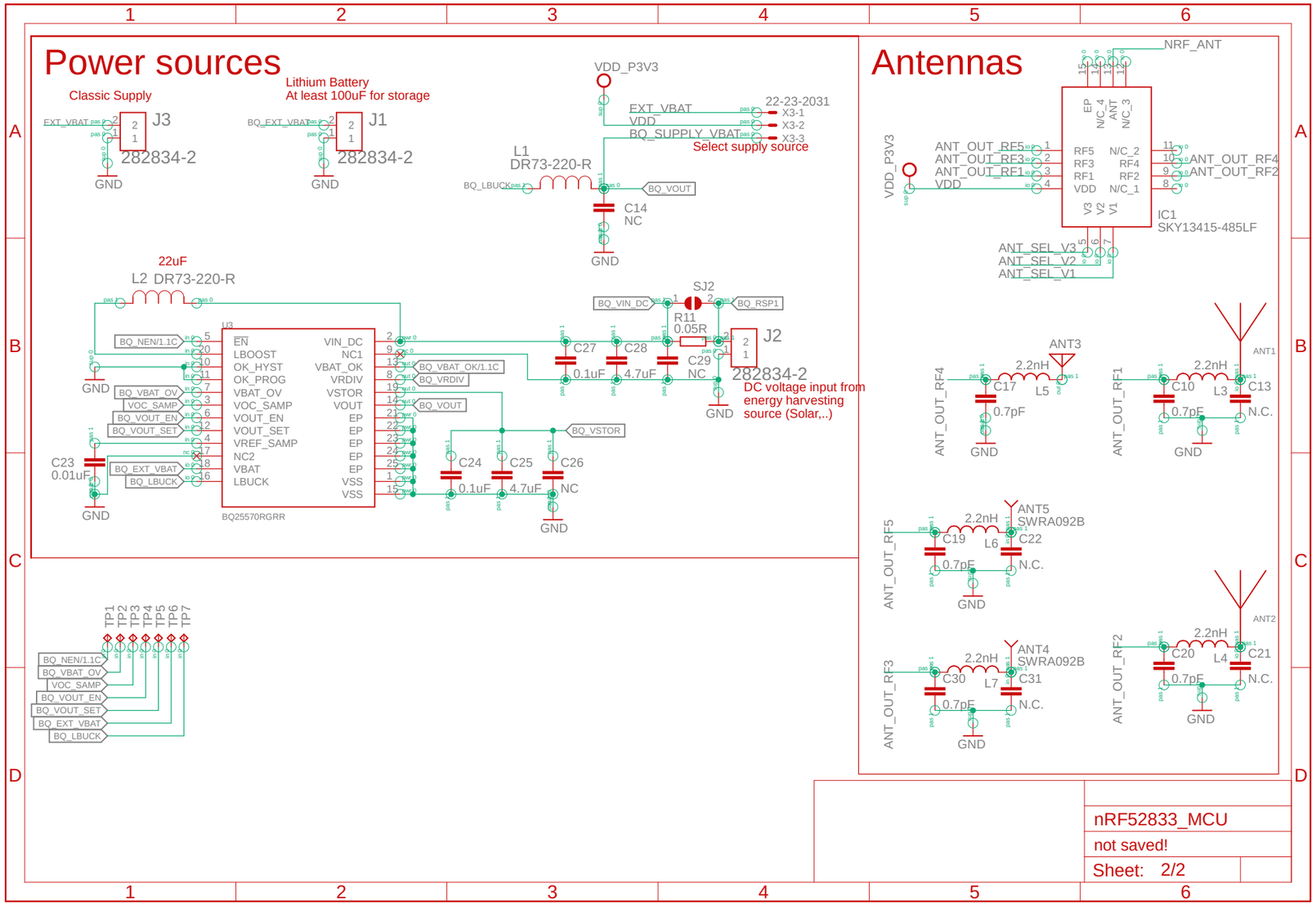

SKY13415-485LF
https://www.mouser.ch/ProductDetail/Skyworks-Solutions-Inc/SKY13415-485LF?qs=sGAEpiMZZMsjJi7B1kCaqYEBgzn8pvPfj2U7YU2wuRo%3D

MASWSS0130TR-3000
https://www.mouser.ch/ProductDetail/MACOM/MASWSS0130TR-3000?qs=3Wmz%2FrCSAaEO1DtjtLPCZg%3D%3D

873-SKY13317-373LF
https://www.mouser.ch/ProductDetail/Skyworks-Solutions-Inc/SKY13317-373LF?qs=WMHGlxXAKT%2FS6%2Fi0J8S9Fw%3D%3D

TQP4M0008
https://www.mouser.ch/ProductDetail/Qorvo/TQP4M0008?qs=z4bnopryTCJhKVxkPpcwfQ%3D%3D