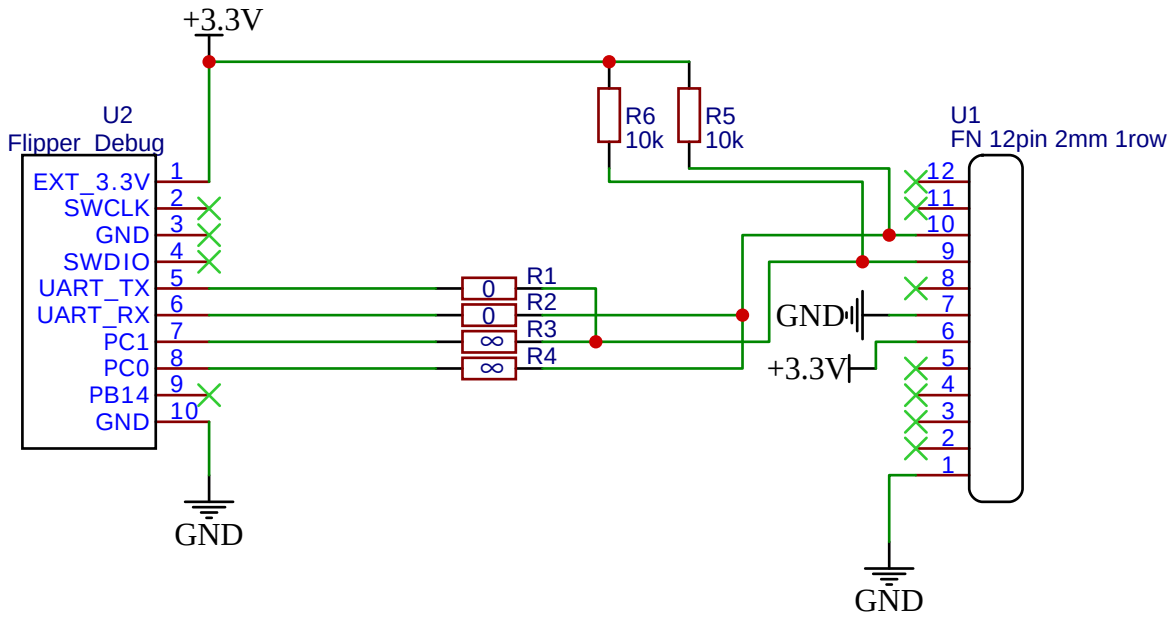

TITLE: Flipper to FN board		REV: 1.1
FLIPPER	Company: OpenSorce	Sheet: 1/1
	Date: 2023-04-22 Drawn By: Igor Danilov	