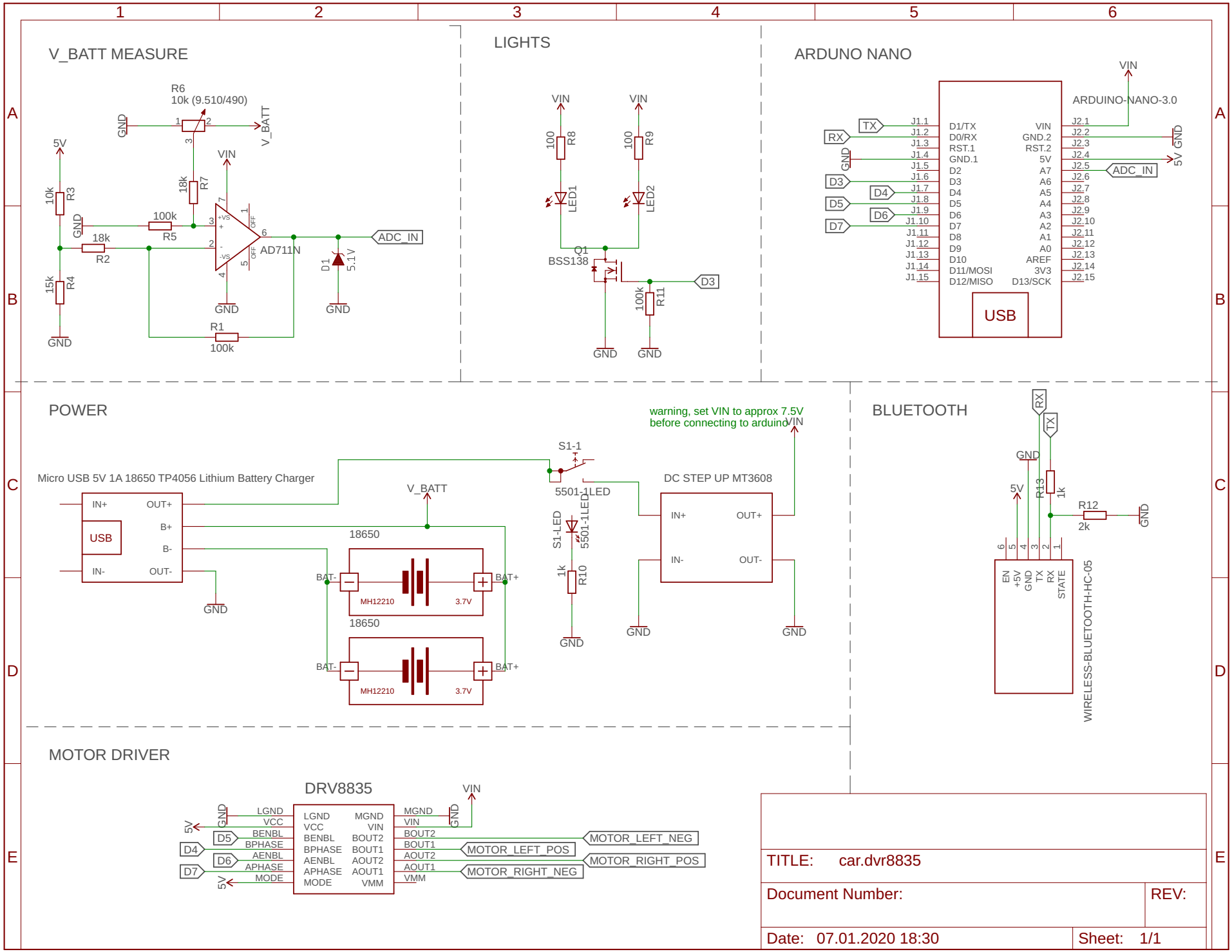
V_BATT MEASURE
R6
10k (9.510/490)
GND
V_BATT
5V
VIN
10k
R3
18k
R7
100k
R5
18k
R2
15k
R4
AD711N
ADC_IN
D1
5.1V
GND
R1
100k
LIGHTS
VIN
100
R8
LED1
100
R9
LED2
Q1
BSS138
100k
R11
D3
ARDUNO NANO
ARDUINO-NANO-3.0
TX
RX
D3
D4
D5
D6
D7
D1/TX
D0/RX
RST.1
GND.1
D2
D3
D4
D5
D6
D7
D8
D9
D10
D11/MOSI
D12/MISO
VIN
GND.2
RST.2
5V
A7
A6
A5
A4
A3
A2
A1
A0
AREF
3V3
D13/SCK
5V GND
ADC_IN
USB
POWER
warning, set VIN to approx 7.5V
before connecting to arduino
Micro USB 5V 1A 18650 TP4056 Lithium Battery Charger
IN+
OUT+
B+
B-
IN-
OUT-
USB
V_BATT
S1-1
5501-1LED
DC STEP UP MT3608
18650
BAT-
BAT+
MH12210
3.7V
S1-LED
1k
R10
BLUETOOTH
RX
TX
GND
5V
R13
1k
R12
2k
EN
+5V
GND
TX
RX
STATE
WIRELESS-BLUETOOTH-HC-05
MOTOR DRIVER
DRV8835
LGND
VCC
BENBL
BPHASE
AENBL
APHASE
MODE
MGND
VIN
BOUT2
BOUT1
AOUT2
AOUT1
VMM
MOTOR_LEFT_NEG
MOTOR_LEFT_POS
MOTOR_RIGHT_POS
MOTOR_RIGHT_NEG
TITLE: car.dvr8835
Document Number:
REV:
Date: 07.01.2020 18:30
Sheet: 1/1